SAMSUNG CONFIDENTIAL
THIS DOCUMENT CONTAINS CONFIDENTIAL
PROPRIETARY INFORMATION THAT IS
SAMSUNG ELECTRONICS CO'S PROPERTY.
DO NOT DISCLOSE TO OR DUPLICATE FOR OTHERS
EXCEPT AS AUTHORIZED BY SAMSUNG.

SM-A047F_REV0.3C

RF Global, NFC O

SM-A047F_EUR,
SM-A047F_CIS
(BSM-A047F/6D4N)

sheet01 : GSM / WCDMA / LTE RF
sheet02 : TRANCEIVER, DRX
sheet03 : SENSORS, CONNECTIVITY
sheet04 : EXYNOS3830(NACHO)
sheet05 : PMIC(Main) ,Charger/F/G/PDIC, KEY, MOTOR, eMCP, SD/SIM
sheet06 : AUDIO, DISPLAY, LCD FPCB CON
sheet07 : CAMERA

Engineer:			
Drawn by:			
R&D CHK:	TITLE:		Size:
DOC CTRL CHK:	A04s		
MFG ENGR CHK:			
Changed by: user93	Date Changed:	Time Changed:	QA CHK:
REV	Drawing Number:		Page: 0

SAMSUNG CONFIDENTIAL
THIS DOCUMENT CONTAINS CONFIDENTIAL PROPRIETARY INFORMATION THAT IS SAMSUNG ELECTRONICS CO'S PROPERTY. DO NOT DISCLOSE TO OR DUPLICATE FOR OTHERS EXCEPT AS AUTHORIZED BY SAMSUNG.

	CIS	LA
FDD	1/ 3/ 5/ 7/ 8/ 20/ 28	1/2/ 3/4/ 5/ 7/ 8/12/13/17/26/28/66
TDD	38/ 40/ 41	38/ 40/ 41
3G	1/ 5/ 8	1/2/4/ 5/ 8
2G	850/900/1800	850/900/1800/1900

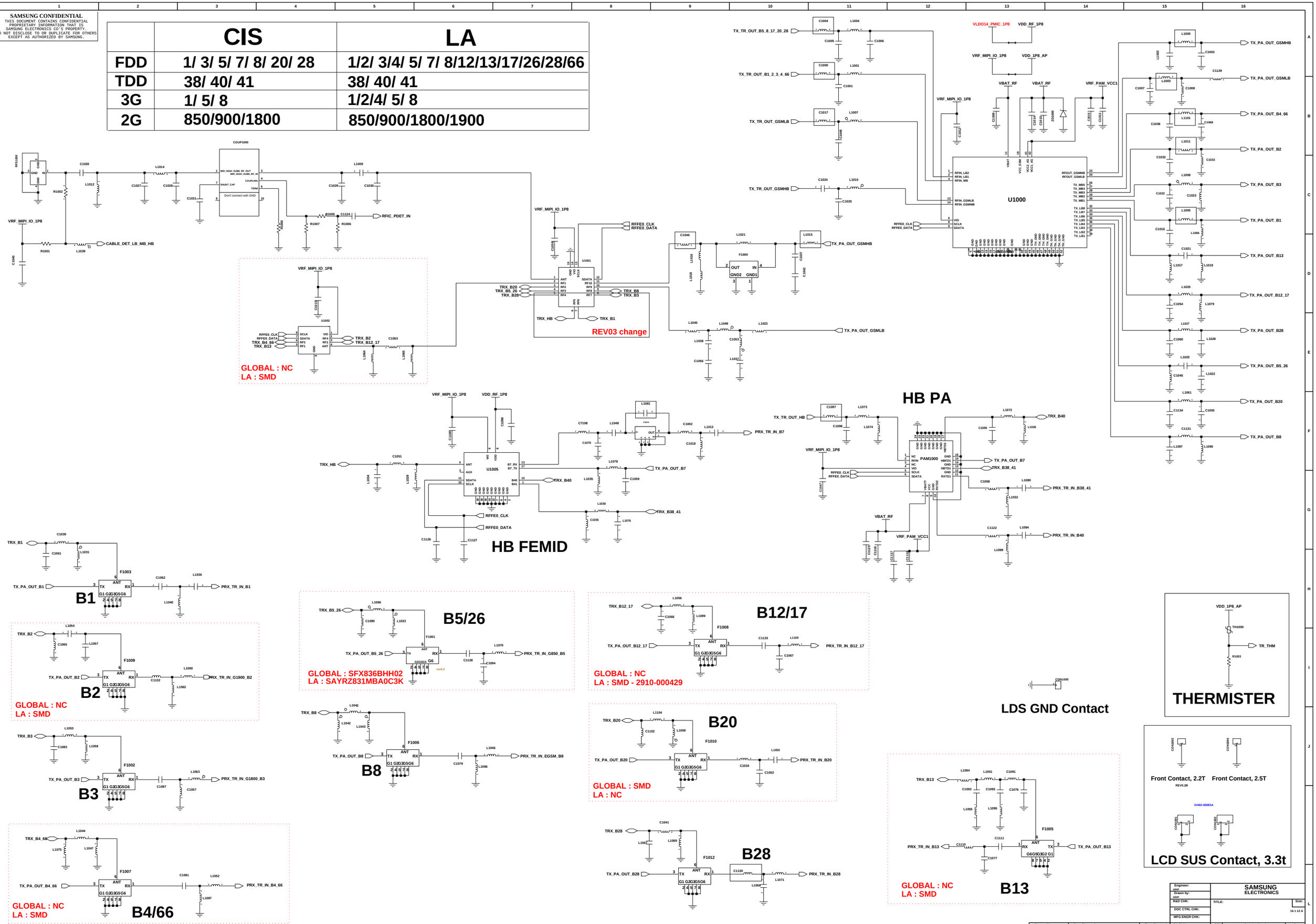

SAMSUNG CONFIDENTIAL
THIS DOCUMENT CONTAINS CONFIDENTIAL
PROPRIETARY INFORMATION THAT IS
SAMSUNG ELECTRONICS CO'S PROPERTY.
DO NOT DISCLOSE TO OR DUPLICATE FOR OTHERS
EXCEPT AS AUTHORIZED BY SAMSUNG.

DRX

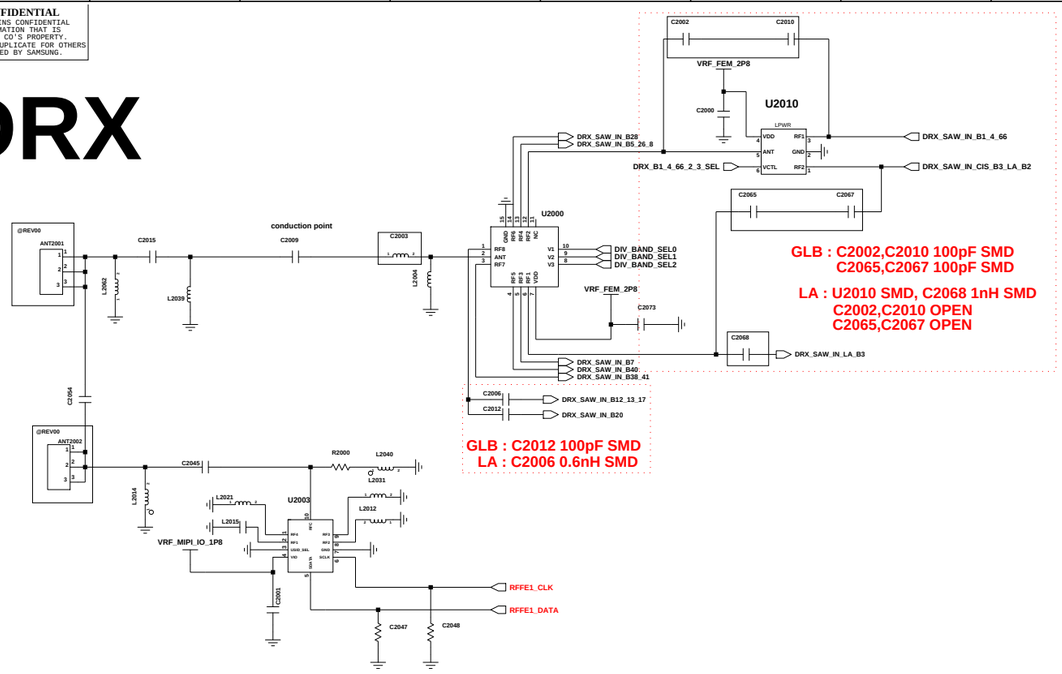

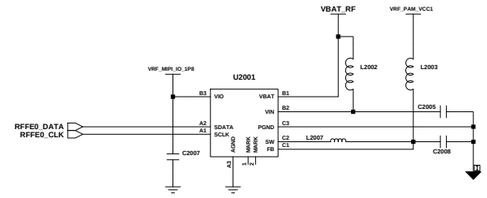

APT MODULATOR

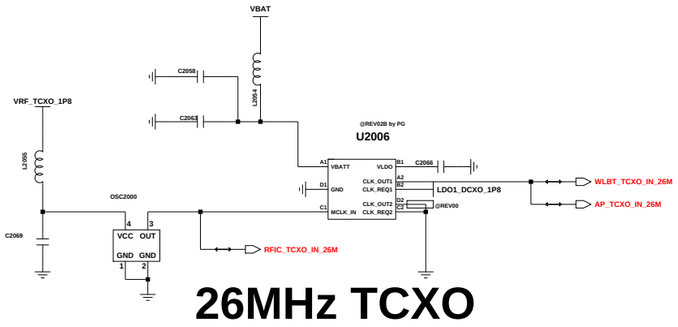

26MHz TCXO

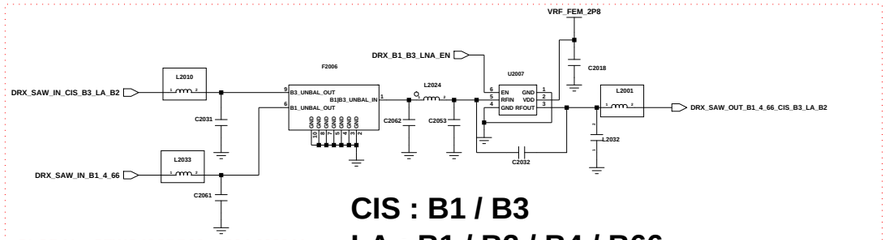

GLOBAL : SFWG42CBB02 / 2904-002344
LA : SAWFD1G96AC2F3K / 2904-002368

CIS : B1 / B3
LA : B1 / B2 / B4 / B66

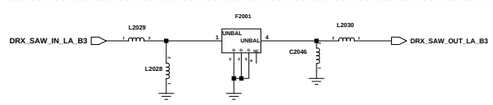

LA B3

GLOBAL : NC
LA : SAFFB1G84AB0F0A(2904-002190) SMD

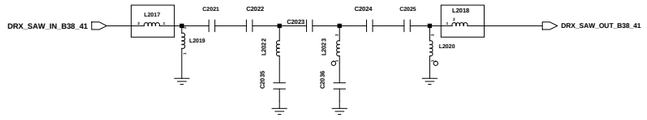

B38 / B41

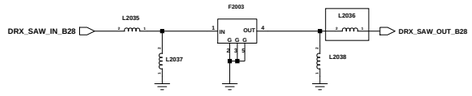

B28

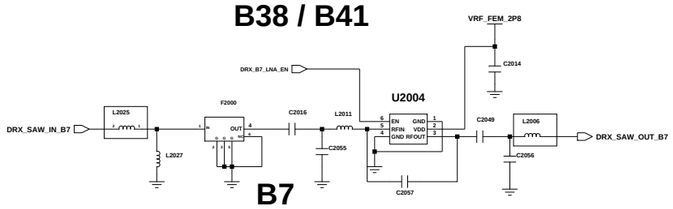

B7

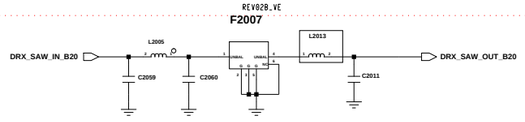

GLOBAL : SMD
LA : NC

B20

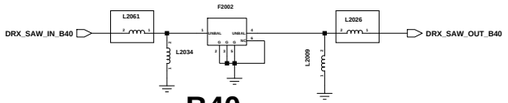

B40

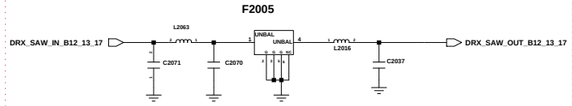

GLOBAL : NC
LA : SMD

B12 / B13 / B17

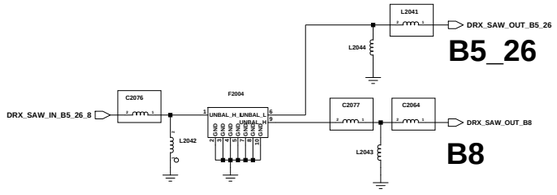

B5_26
B8

B5_26/ B8

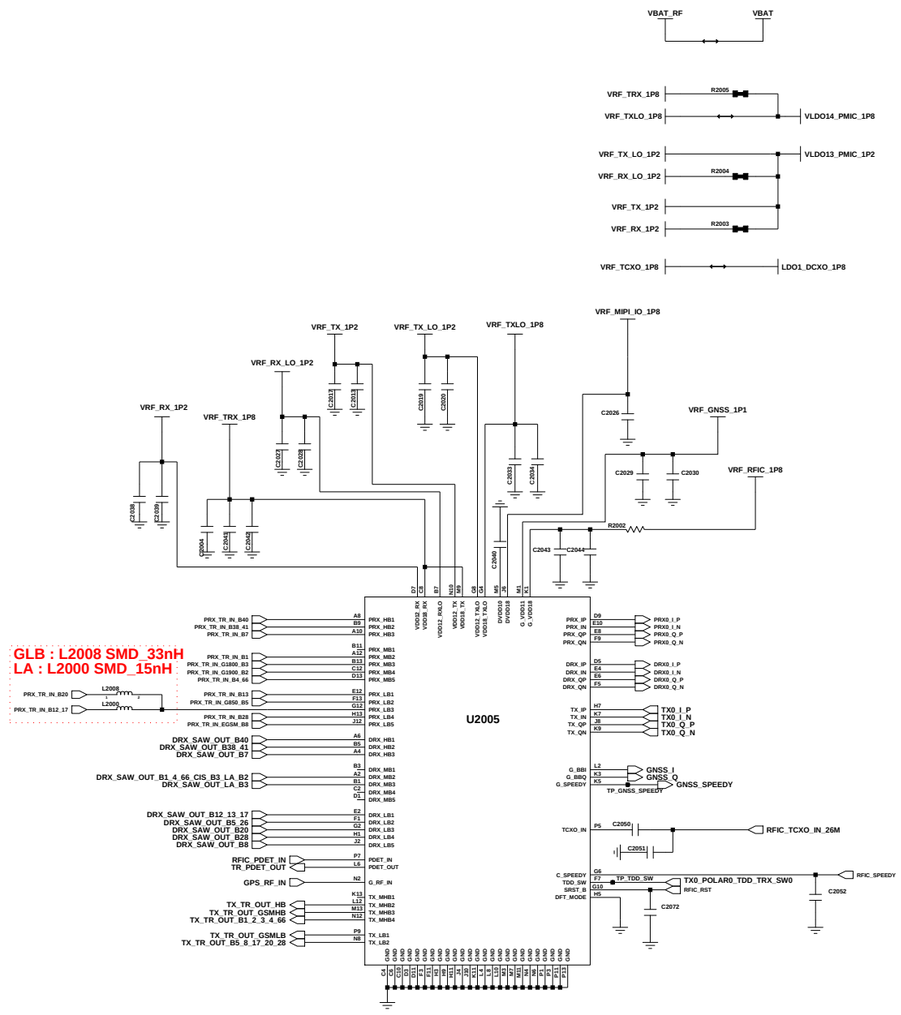

TRANSCEIVER

Engineer			
Drawn by:			
R&D CHK:		TITLE:	Size:
DOC CTRL CHK:			
MFG ENGR CHK:			
Changed by:	Date Changed:	Time Changed:	QA CHK:
Drawing Number	2/7		

SAMSUNG CONFIDENTIAL
THIS DOCUMENT CONTAINS CONFIDENTIAL
PROPRIETARY INFORMATION THAT IS
SAMSUNG ELECTRONICS CO'S PROPERTY.
DO NOT DISCLOSE TO OR DUPLICATE FOR OTHERS
EXCEPT AS AUTHORIZED BY SAMSUNG.

BT/WIFI

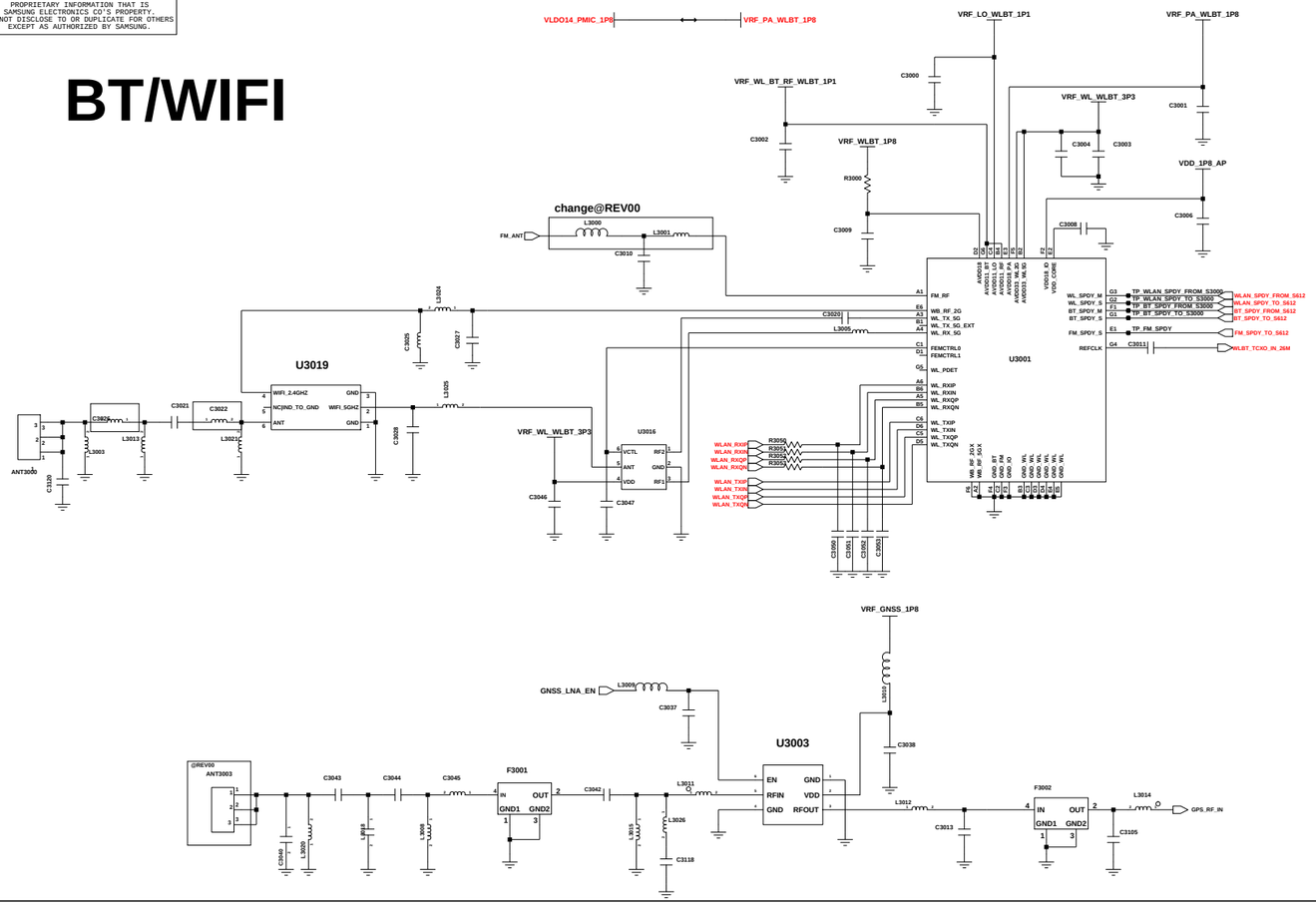

NFC

NFC components are only for

SM-A047F_EUR,
SM-A047F_CIS
(BSM-A047F/6D4N)

REV02B : ET51618YB by PG

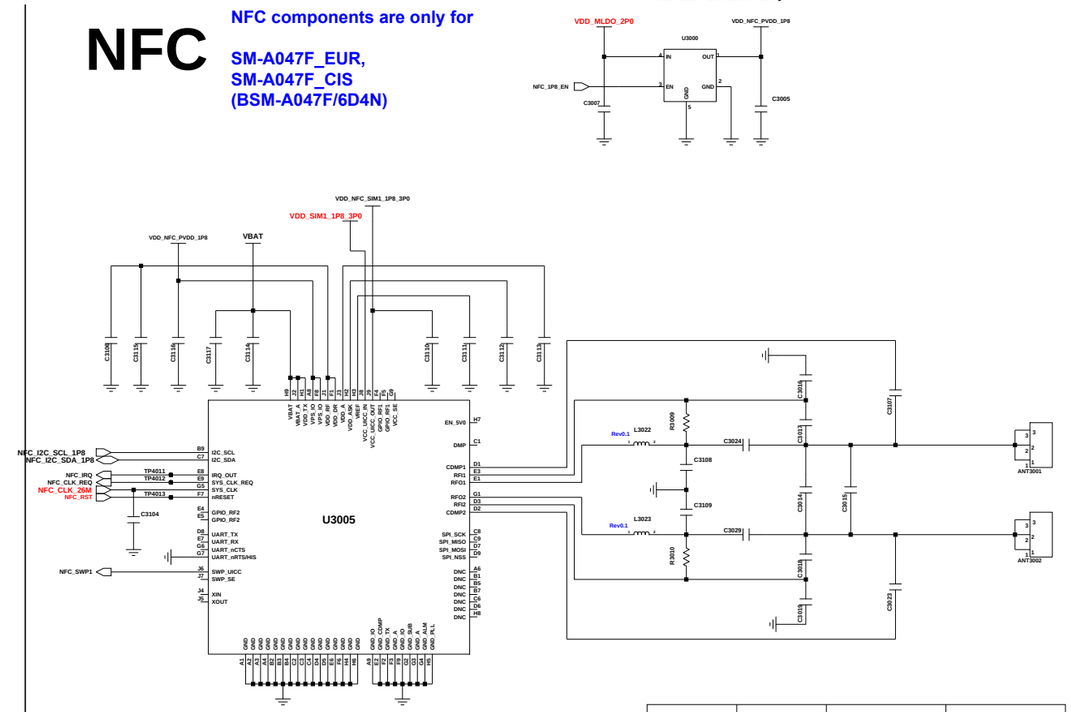

NFC	NFC PART	Power supply of SIM1		NFC GPIO 14	
	U3005	R5017	R5018	R4005	R4006
NFC	CONNECT	short	open	10K ohm	open
nonNFC	NC	open	short	open	10K ohm

SENSORS

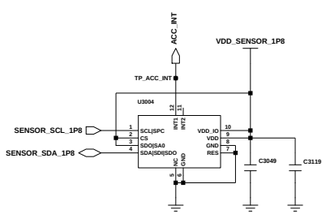

Accel. Sensor

FINGER PRINT SENSOR

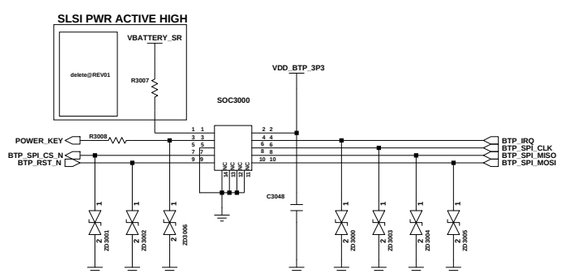

Engineer:	
Drawn by:	
R&D CHK:	TITLE:
DOC CTRL CHK:	
MFG ENGR CHK:	
QA CHK:	

Size:

Changed by:	Date Changed:	Time Changed:	REV:	Drawing Number:	Page:
user93					37

SAMSUNG CONFIDENTIAL
THIS DOCUMENT CONTAINS CONFIDENTIAL
AND PROPRIETARY INFORMATION OF
SAMSUNG ELECTRONICS CO'S PROPERTY.
DO NOT DISCLOSE TO OR DUPLICATE FOR OTHERS
EXCEPT AS AUTHORIZED BY SAMSUNG.

EXYNOS3830 (NACHO)

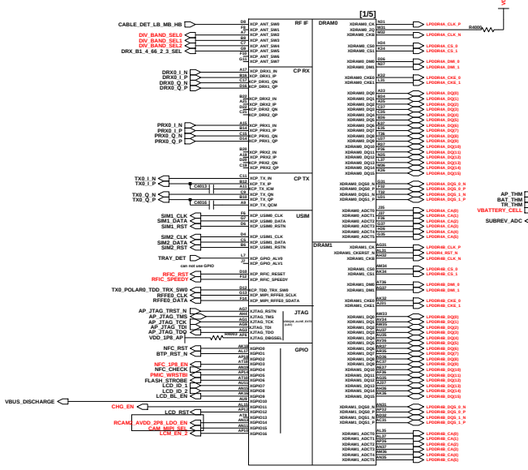

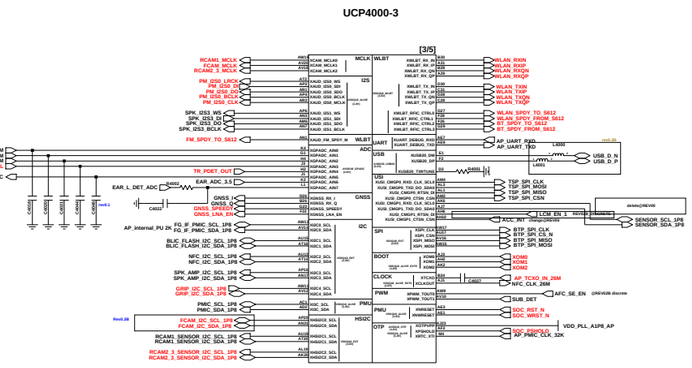

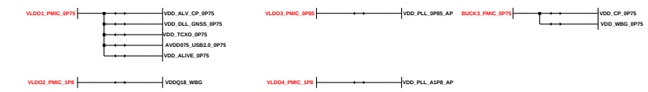

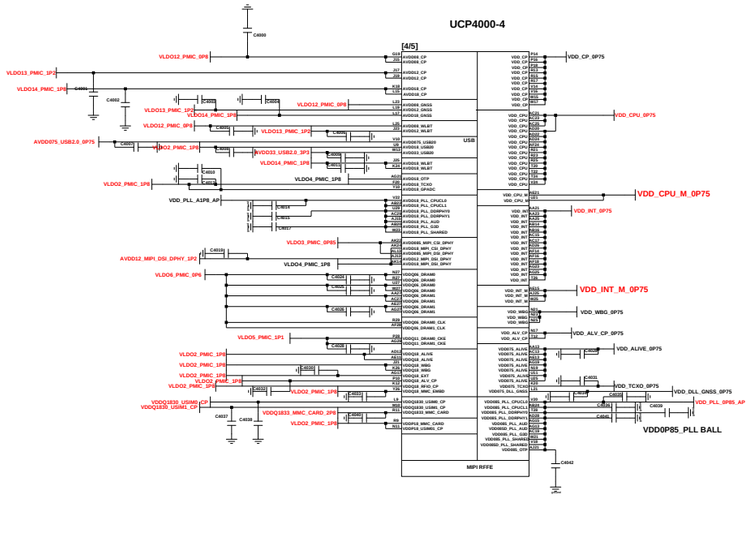

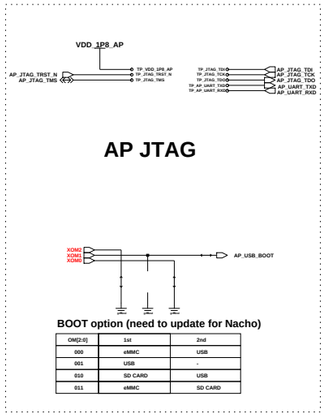

AP JTAG

OM[2:0]	1st	2nd
000	eMMC	USB
001	USB	-
010	SD CARD	USB
011	eMMC	SD CARD

H/W Revision Setting

MODEL	REV	HW_VER2	HW_VER1	HW_VER0
A047F	0.0	0	0	0
A047F	0.1, 0.2	0	0	1
A047F	0.2B	0	1	0
A047F	0.2C	0	1	1
A047F	0.3	1	0	0
A047F	0.3C	1	0	1

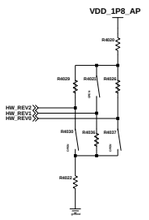

NFC OPTION

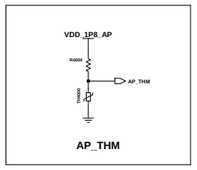

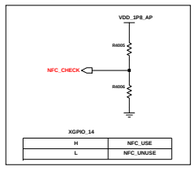

I2C Pull-up Register

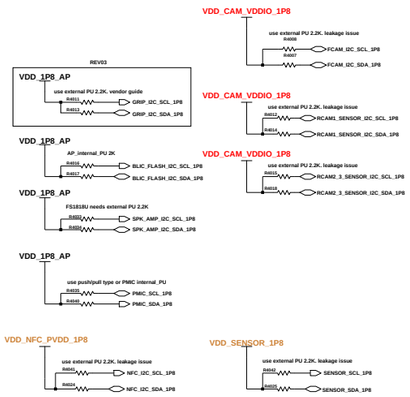

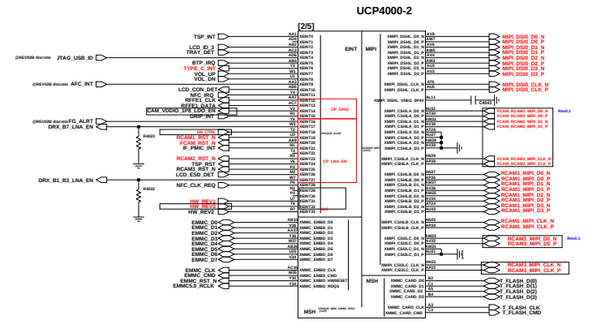

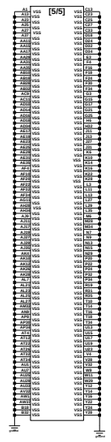

AP Decap

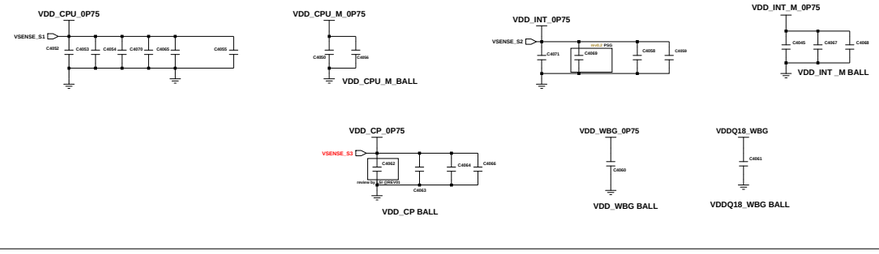

PCB JTAG

Discrete array leakage added

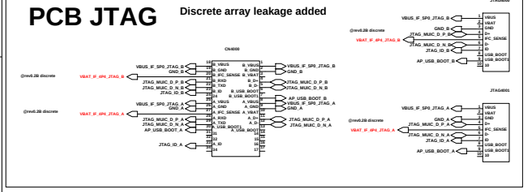

POWER OFF LEAKAG

Discrete array leakage added

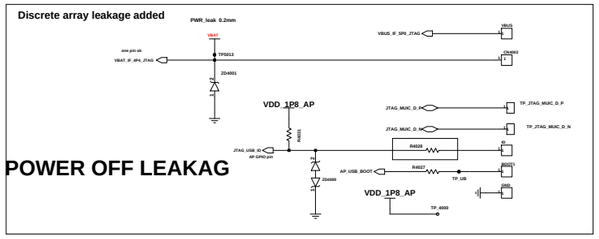

Changed by:	Date Changed:	Time Changed:

Engineer:
Drawn by:
R&D CHK:
DOC CTRL CHK:
MFG ENGR CHK:
Q4 CHK:
TITLE:
SIZE
REV
Drawing Number:
Page: 47

SAMSUNG CONFIDENTIAL
THIS DOCUMENT CONTAINS CONFIDENTIAL
AND PROPRIETARY INFORMATION OF
SAMSUNG ELECTRONICS CO'S PROPERTY.
DO NOT DISCLOSE TO OR DUPLICATE FOR OTHERS
EXCEPT AS AUTHORIZED BY SAMSUNG.

MAIN_PMIC

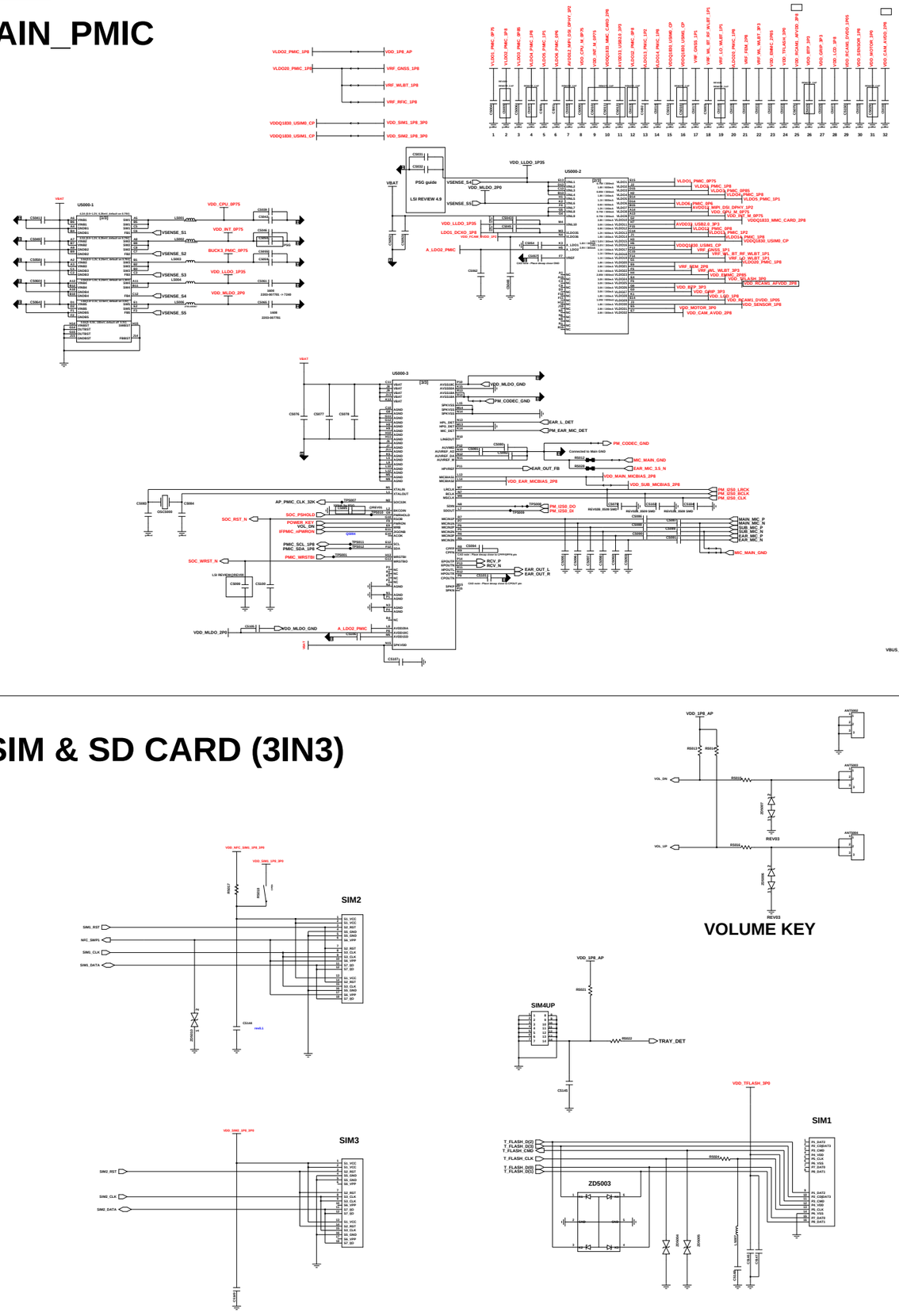

IF_PMIC = Charger SY6970C + F/G MAX17260 + PDIC ET7303

Charger

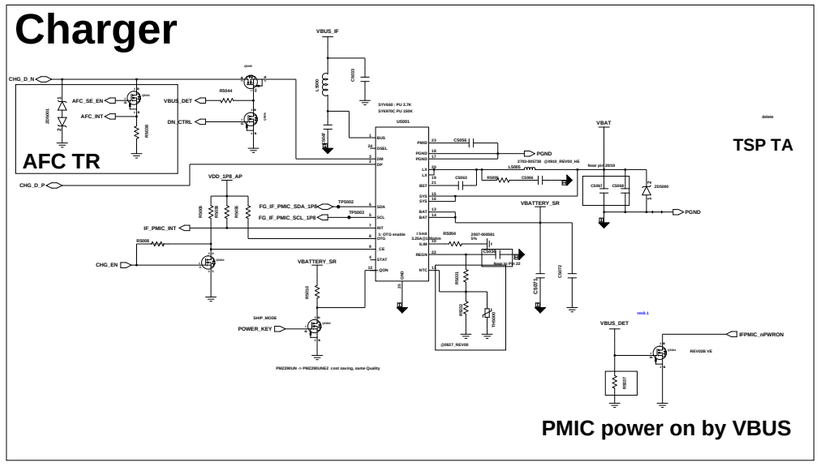

PD IC

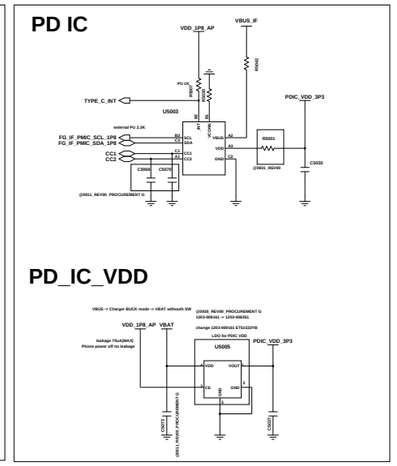

F/G

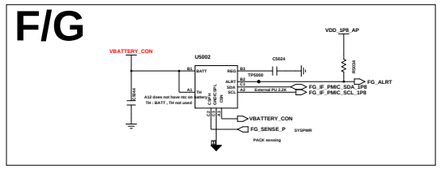

OVP

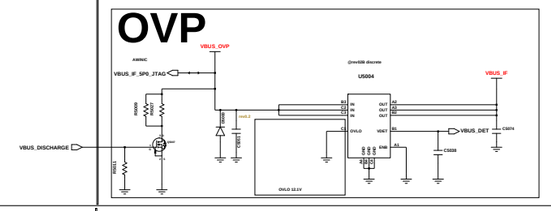

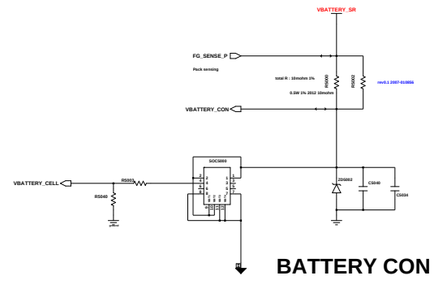

BATTERY CON

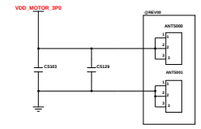

MOTOR

SIM & SD CARD (3IN3)

VOLUME KEY

eMCP

* Default eMCP 3G LPDDR4X & 32GB eMMC 5.1 : 1108 - 000678
eMCP 4G LPDDR4X & 64GB eMMC 5.1 : 1108 - 000725
eMCP 4G LPDDR4X & 128GB eMMC 5.1 : 1108 - 000717

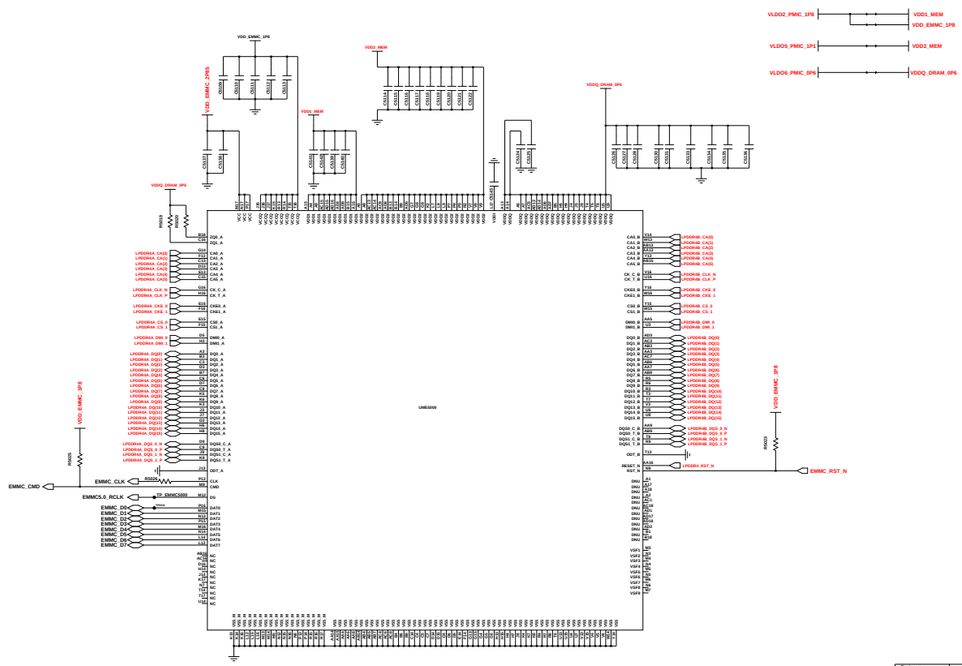

Engineer:	
Drawn by:	
R&D CHK:	TITLE:
DOC CTRL CHK:	
MFG ENGR CHK:	

Changed by:	Date Changed:	Time Changed:	QA CHK:	REV:	Drawing Number:	Page:1p1

SAMSUNG CONFIDENTIAL
THIS DOCUMENT CONTAINS CONFIDENTIAL PROPRIETARY INFORMATION THAT IS SAMSUNG ELECTRONICS CO'S PROPERTY. DO NOT DISCLOSE TO OR DUPLICATE FOR OTHERS EXCEPT AS AUTHORIZED BY SAMSUNG.

BLIC

COPY FROM A135F

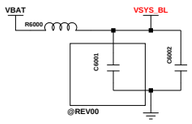

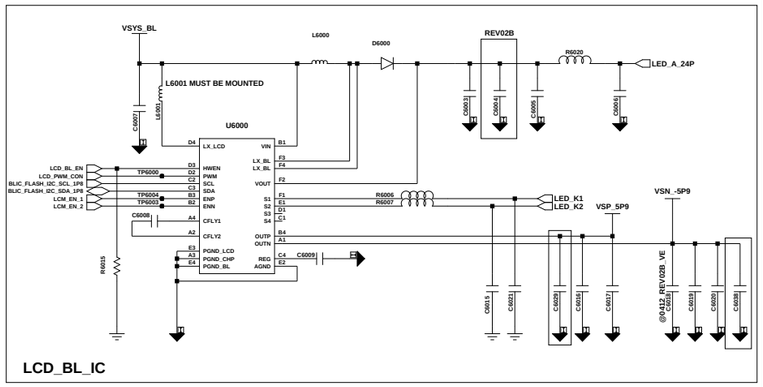

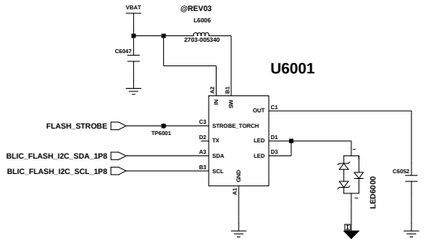

FLASH LED driver IC(new item)

COPY FROM A135F

MAIN FPCB_PART (78pin) 6.5" HD+ TFT V-CUT

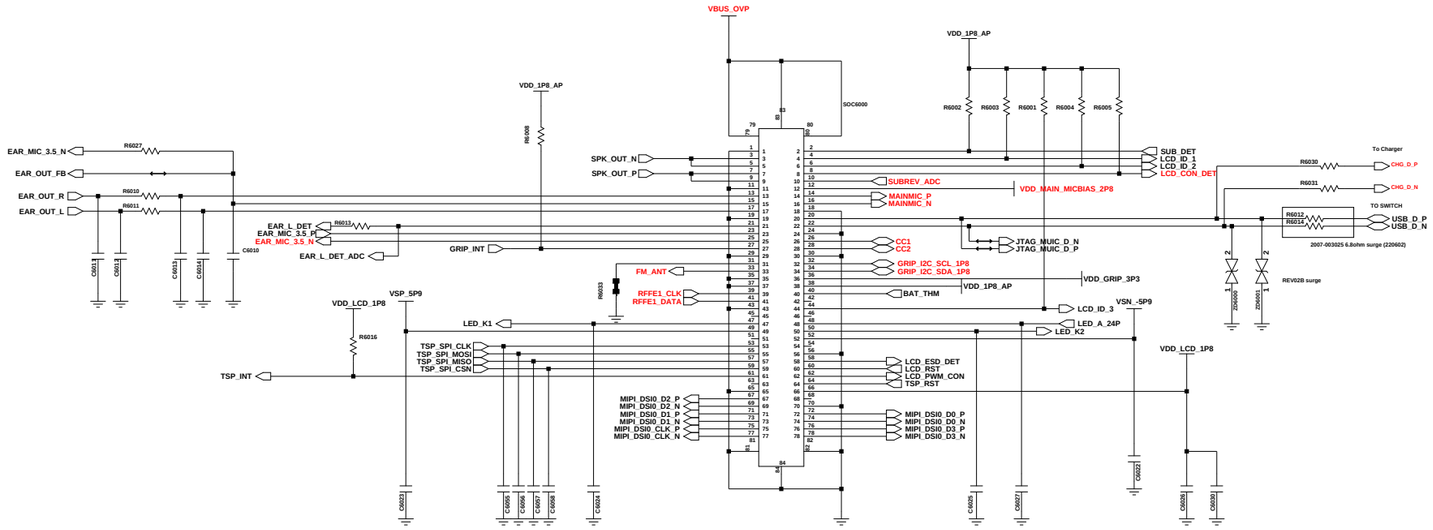

AUDIO_PART

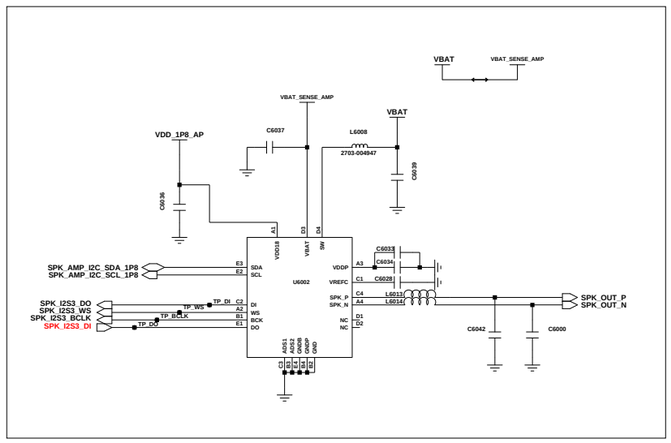

SPK AMP

NEW

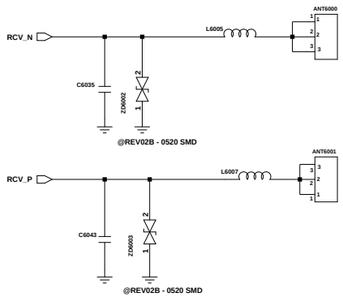

RCV CONTACT

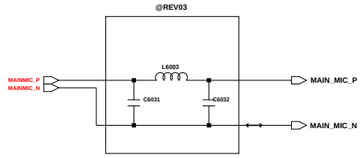

MAIN MIC

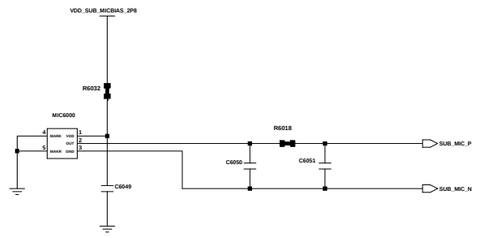

Sub MIC

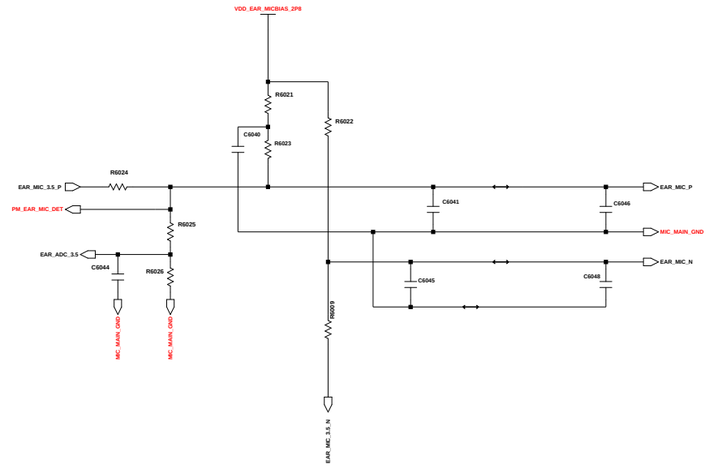

Ear MIC

Engineer:			
Drawn by:			
R&D CHK:	TITLE:		Size:
DOC CTRL CHK:			
MFG ENGR CHK:			
Changed by:	Date Changed:	Time Changed:	QA CHK:
REV	Drawing Number:		Page:6/7

SAMSUNG CONFIDENTIAL
THIS DOCUMENT CONTAINS CONFIDENTIAL
PROPRIETARY INFORMATION THAT IS
SAMSUNG ELECTRONICS CO'S PROPERTY.
DO NOT DISCLOSE TO OR DUPLICATE FOR OTHERS
EXCEPT AS AUTHORIZED BY SAMSUNG.

CAMERA_PART

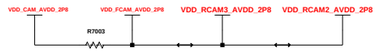

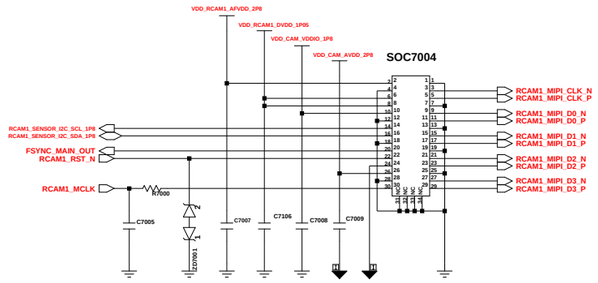

RCAM1_50M(30PIN)

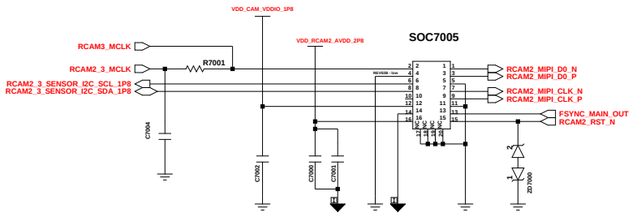

RCAM2_2M BOKEH CAMERA(16PIN)

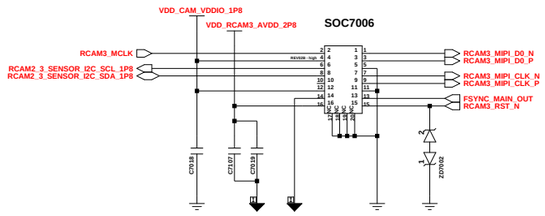

RCAM3_2M MACRO CAMERA(16PIN)

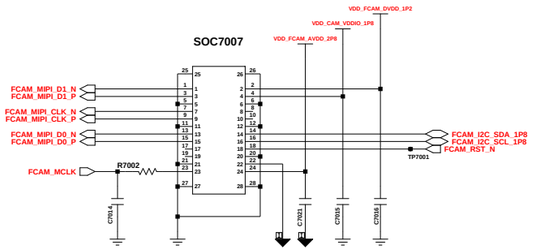

FCAM_5M(24PIN)

CAMERA MIPI SWITCH

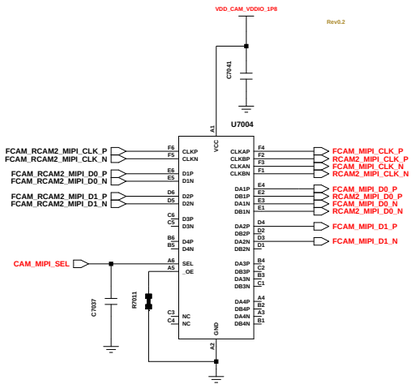

BOSS HOLE

2D BARCODE

RF BAND

NFC

MEMORY

SHIELD CAN

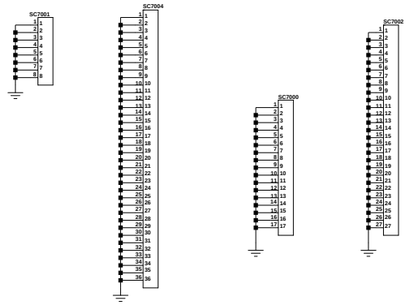

CAM LDO

RCAM1

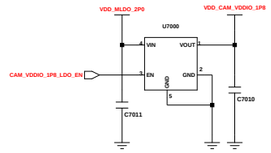

RCAM2/3

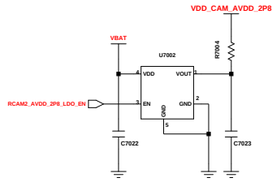

Engineer:			
Drawn by:	CAMERA, DISPLAY		
R&D CHK:	TITLE:		Size:
DOC CTRL CHK:			
MFG ENGR CHK:			

Changed by:	Date Changed:	Time Changed:	QA CHK:	REV	Drawing Number:	Page: 2/2

SM-A047F_EUR, SM-A047F_CIS (BSM-A047F/6D4N)

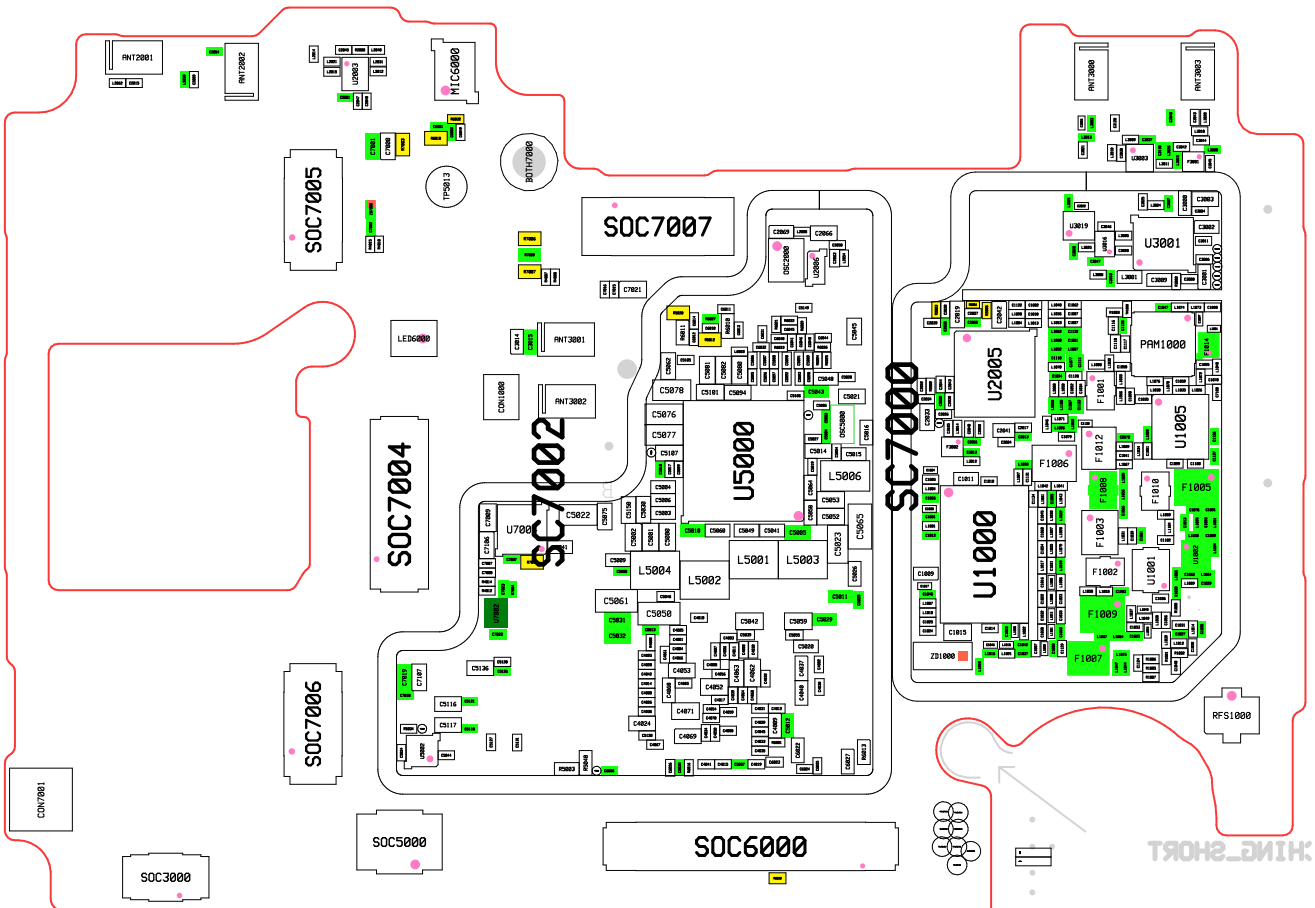

SM-A047F_EUR,
SM-A047F_CIS
(BSM-A047F/6D4N)

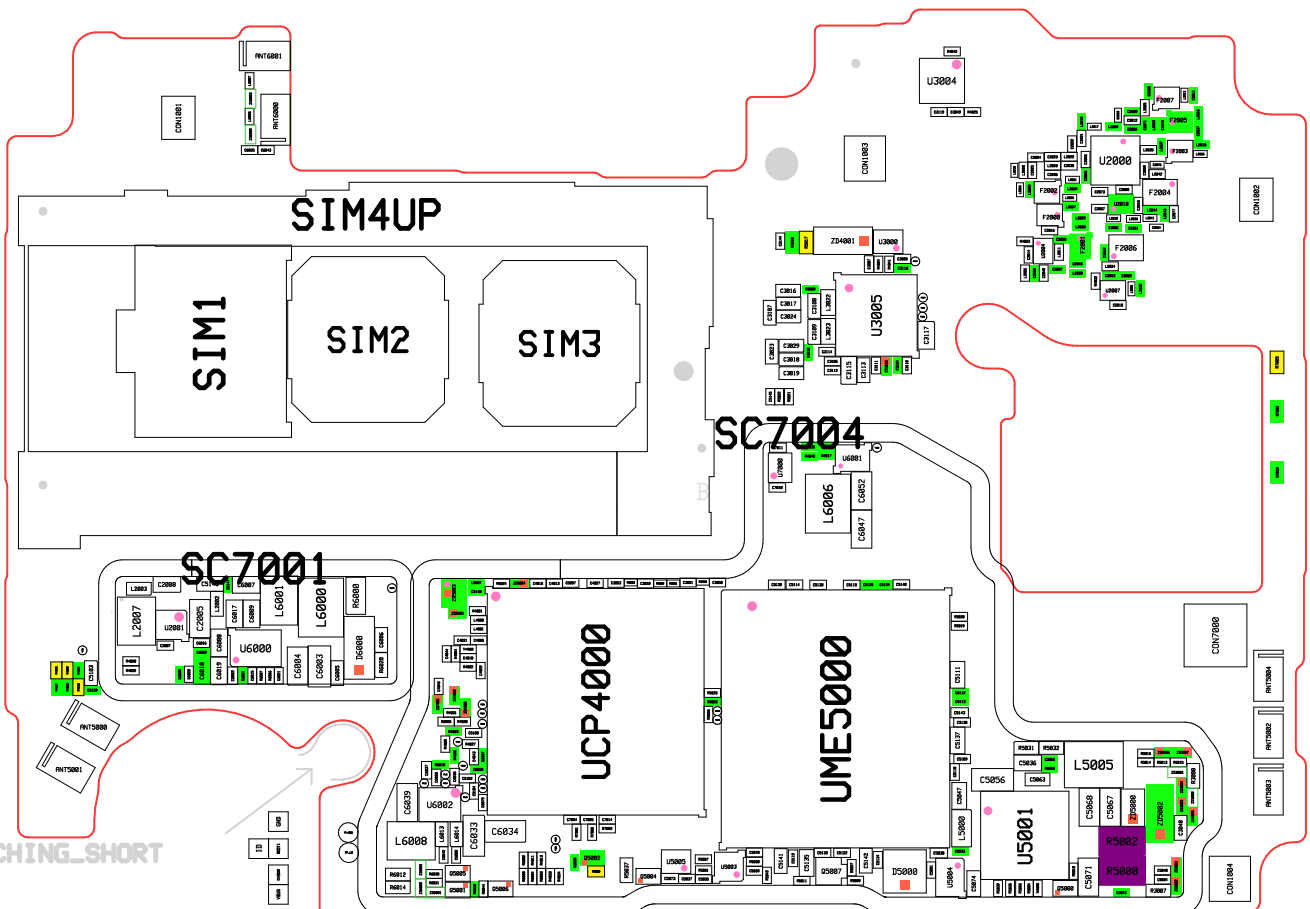

SAMSUNG CONFIDENTIAL
THIS DOCUMENT CONTAINS CONFIDENTIAL
PROPRIETARY INFORMATION THAT IS
SAMSUNG ELECTRONICS CO'S PROPERTY.
DO NOT DISCLOSE TO OR DUPLICATE FOR OTHERS
EXCEPT AS AUTHORIZED BY SAMSUNG.

SM-A047F_REV0.3C

RF Global, NFC X

SM-A047F_CIS
(BSM-A047F/3R3D,
BSM-A047F/6R4D)
SM-A047F_MEA,
SM-A047F_SEA,
SM-A047F_SWA

sheet01 : GSM / WCDMA / LTE RF
sheet02 : TRANCEIVER, DRX
sheet03 : SENSORS, CONNECTIVITY
sheet04 : EXYNOS3830(NACHO)
sheet05 : PMIC(Main) ,Charger/F/G/PDIC, KEY, MOTOR, eMCP, SD/SIM
sheet06 : AUDIO, DISPLAY, LCD FPCB CON
sheet07 : CAMERA

Engineer:			
Drawn by:			
R&D CHK:	TITLE: A04s		Size:
DOC CTRL CHK:			
MFG ENGR CHK:			
QA CHK:	REV	Drawing Number:	Page: 0

Changed by: user93 | Date Changed: | Time Changed:

SAMSUNG CONFIDENTIAL
THIS DOCUMENT CONTAINS CONFIDENTIAL PROPRIETARY INFORMATION THAT IS SAMSUNG ELECTRONICS CO'S PROPERTY. DO NOT DISCLOSE TO OR DUPLICATE FOR OTHERS EXCEPT AS AUTHORIZED BY SAMSUNG.

	CIS	LA
FDD	1/ 3/ 5/ 7/ 8/ 20/ 28	1/2/ 3/4/ 5/ 7/ 8/12/13/17/26/28/66
TDD	38/ 40/ 41	38/ 40/ 41
3G	1/ 5/ 8	1/2/4/ 5/ 8
2G	850/900/1800	850/900/1800/1900

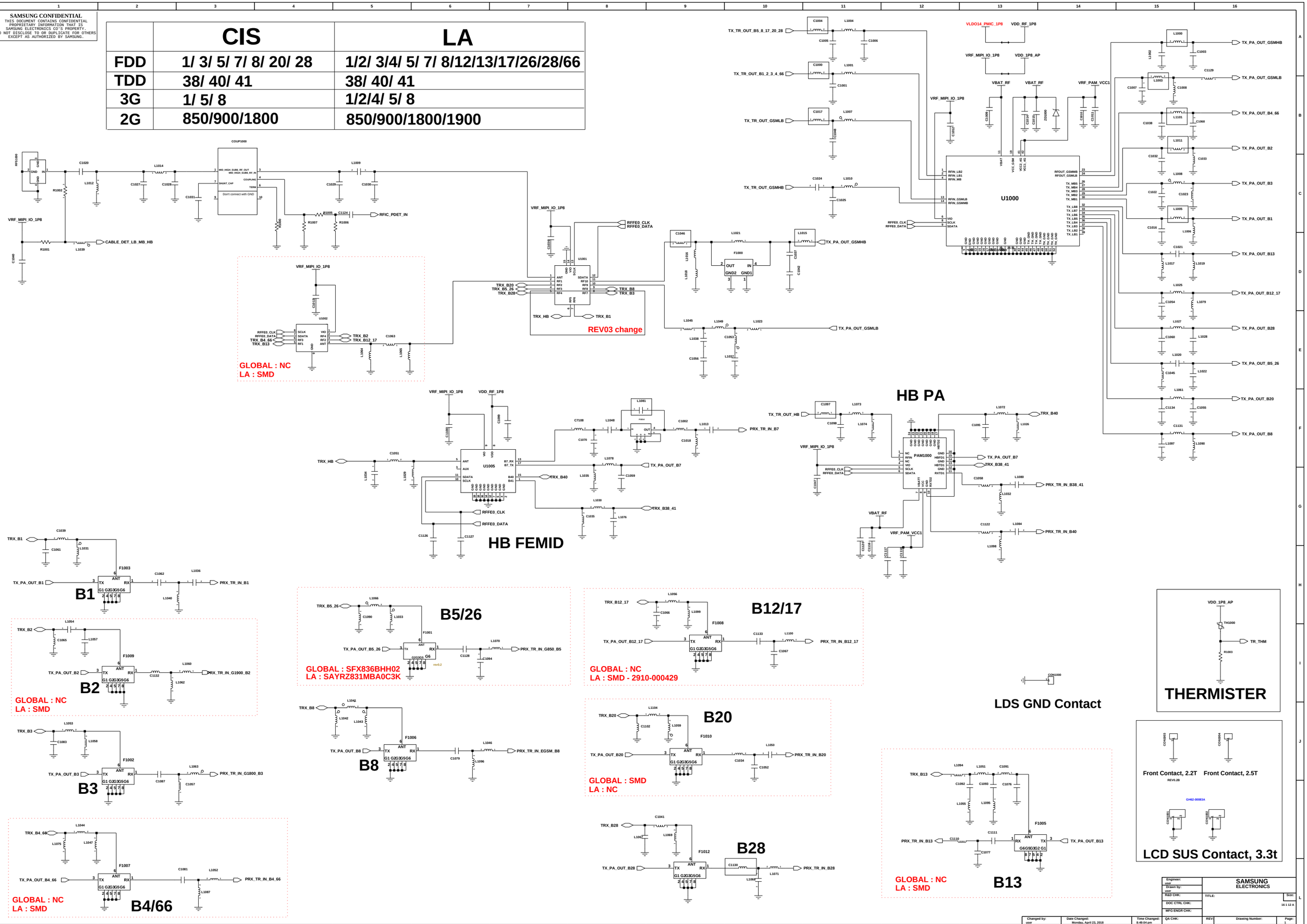

SAMSUNG CONFIDENTIAL
THIS DOCUMENT CONTAINS CONFIDENTIAL
PROPRIETARY INFORMATION THAT IS
SAMSUNG ELECTRONICS CO'S PROPERTY.
DO NOT DISCLOSE TO OR DUPLICATE FOR OTHERS
EXCEPT AS AUTHORIZED BY SAMSUNG.

DRX

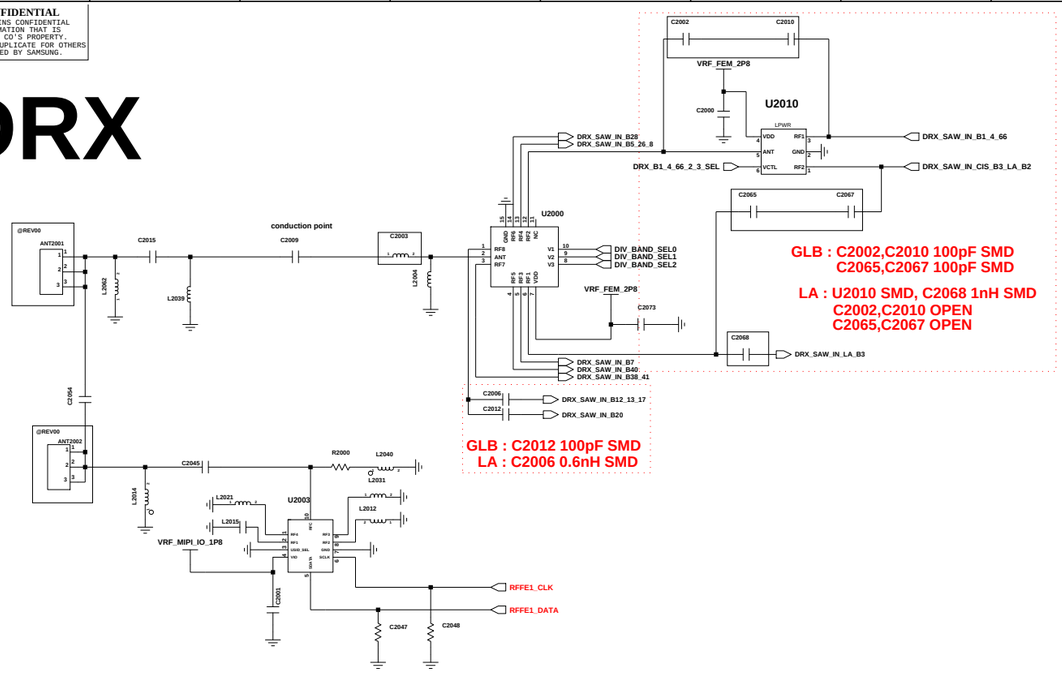

APT MODULATOR

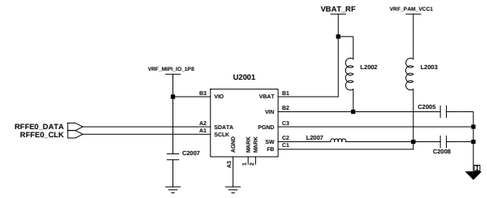

26MHz TCXO

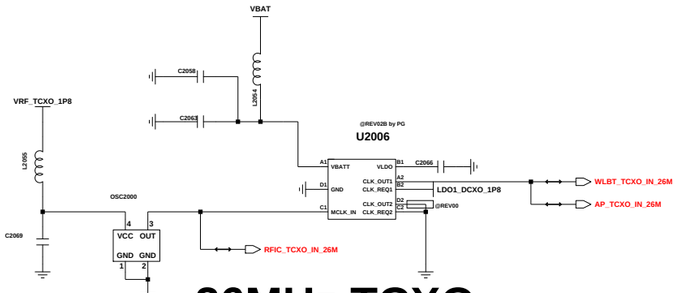

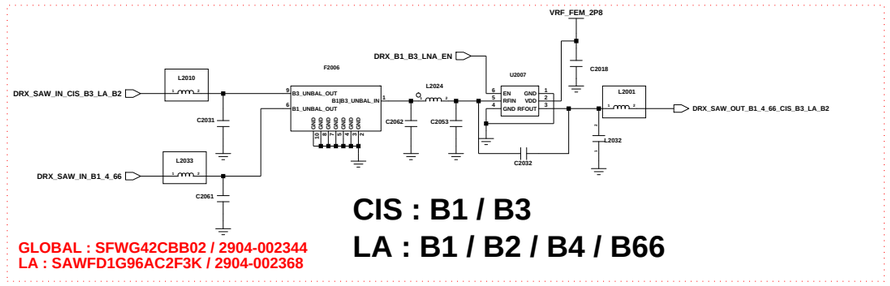

GLOBAL : SFWG42CBB02 / 2904-002344
LA : SAWFD1G96AC2F3K / 2904-002368

CIS : B1 / B3
LA : B1 / B2 / B4 / B66

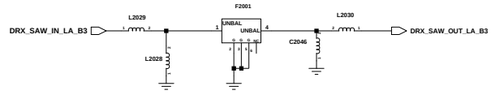

LA B3

GLOBAL : NC
LA : SAFFB1G84AB0F0A(2904-002190) SMD

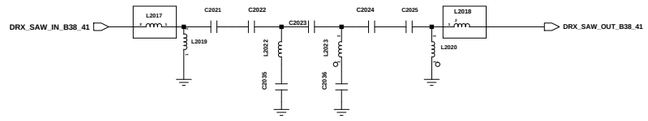

B38 / B41

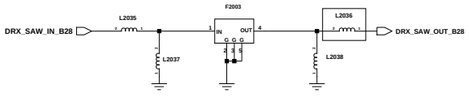

B28

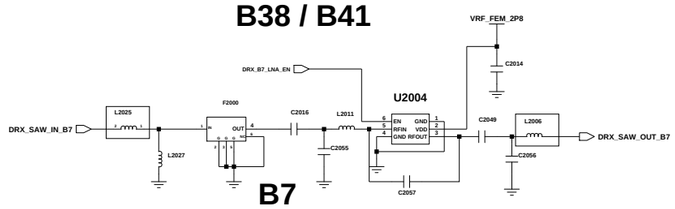

B7

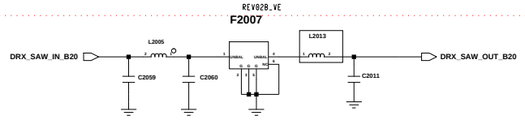

GLOBAL : SMD
LA : NC

B20

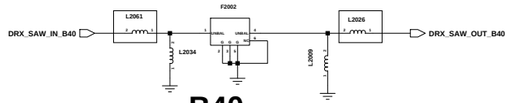

B40

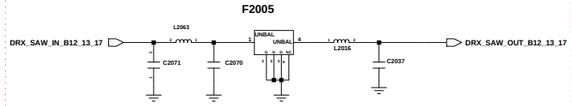

GLOBAL : NC
LA : SMD

B12 / B13 / B17

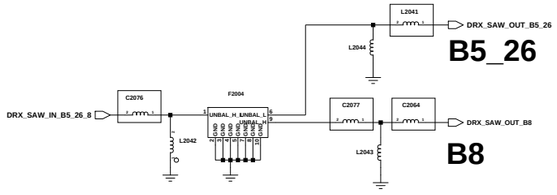

B5_26

B8

B5_26/ B8

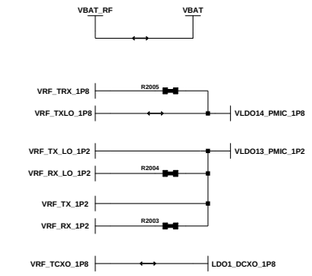

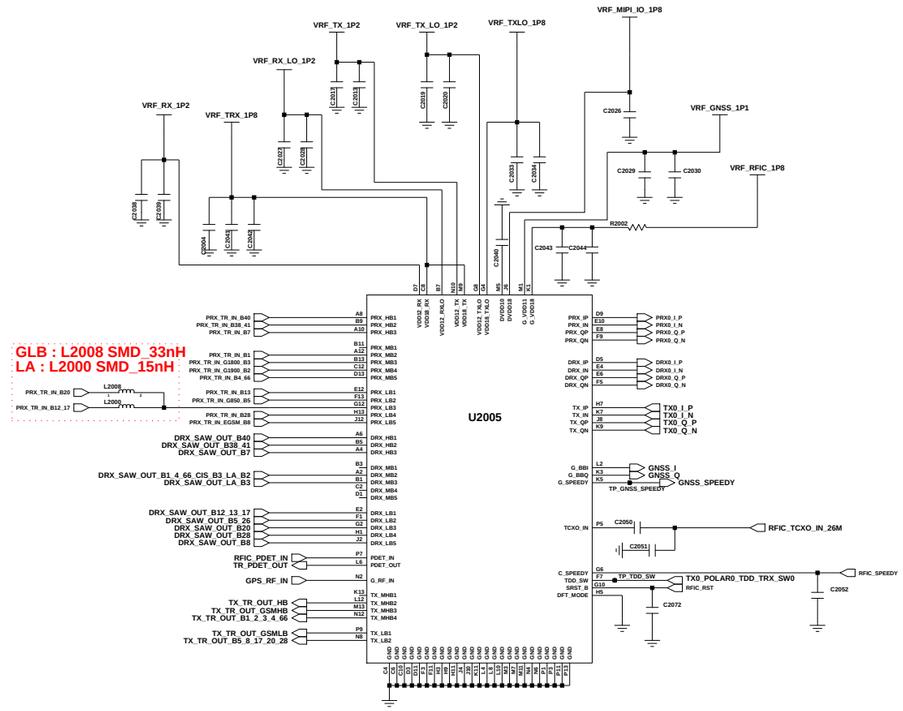

TRANSCEIVER

Engineer			
Drawn by:			
R&D CHK:	TITLE:		Size:
DOC CTRL CHK:			
MFG ENGR CHK:			
Changed by:	Date Changed:	Time Changed:	QA CHK:
Drawing Number	2/7		

SAMSUNG CONFIDENTIAL
THIS DOCUMENT CONTAINS CONFIDENTIAL
PROPRIETARY INFORMATION THAT IS
SAMSUNG ELECTRONICS CO'S PROPERTY.
DO NOT DISCLOSE TO OR DUPLICATE FOR OTHERS
EXCEPT AS AUTHORIZED BY SAMSUNG.

BT/WIFI

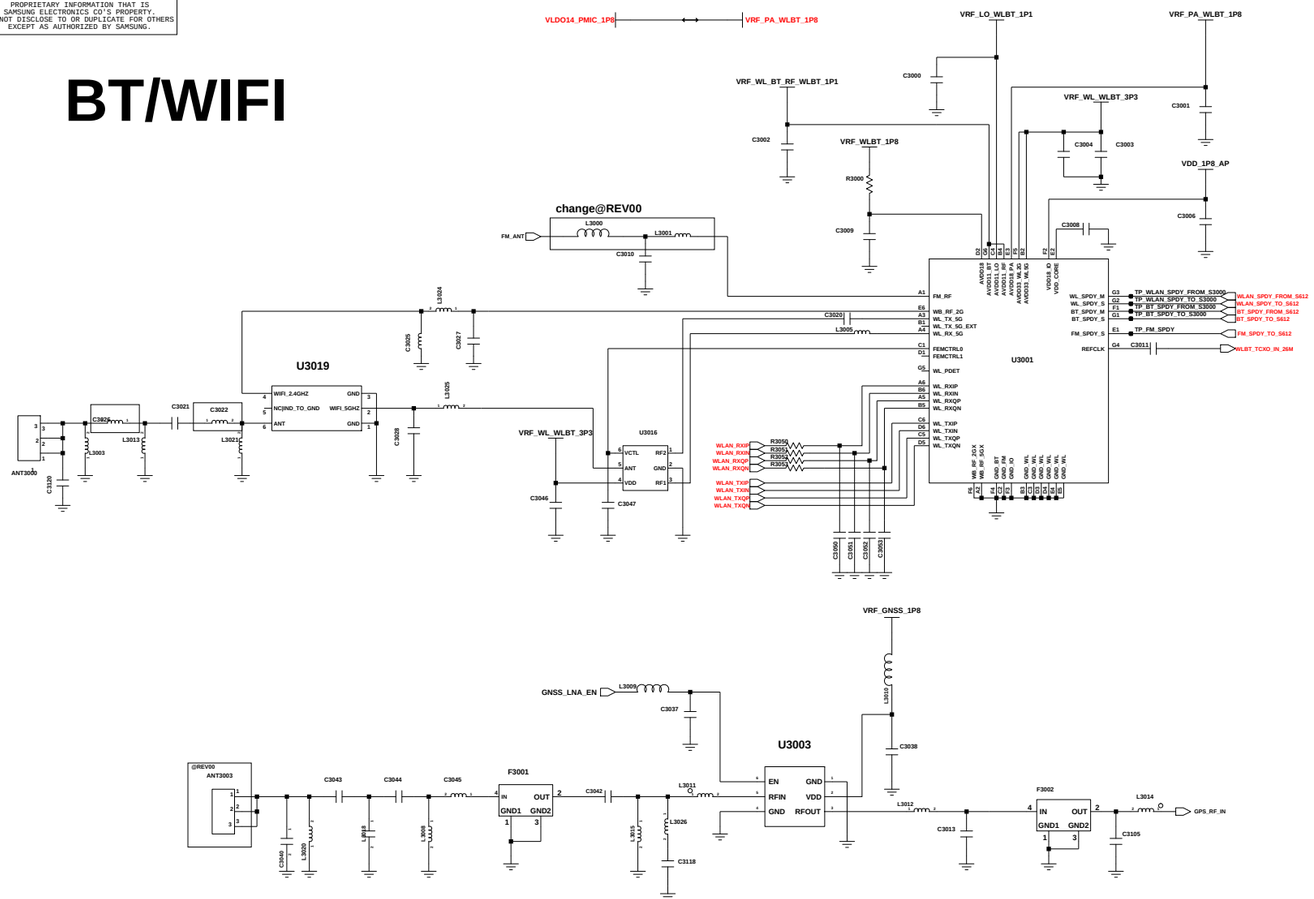

NFC

NFC components are only for

SM-A047F_EUR,
SM-A047F_CIS
(BSM-A047F/6D4N)

REV02B : ET51618YB by PG

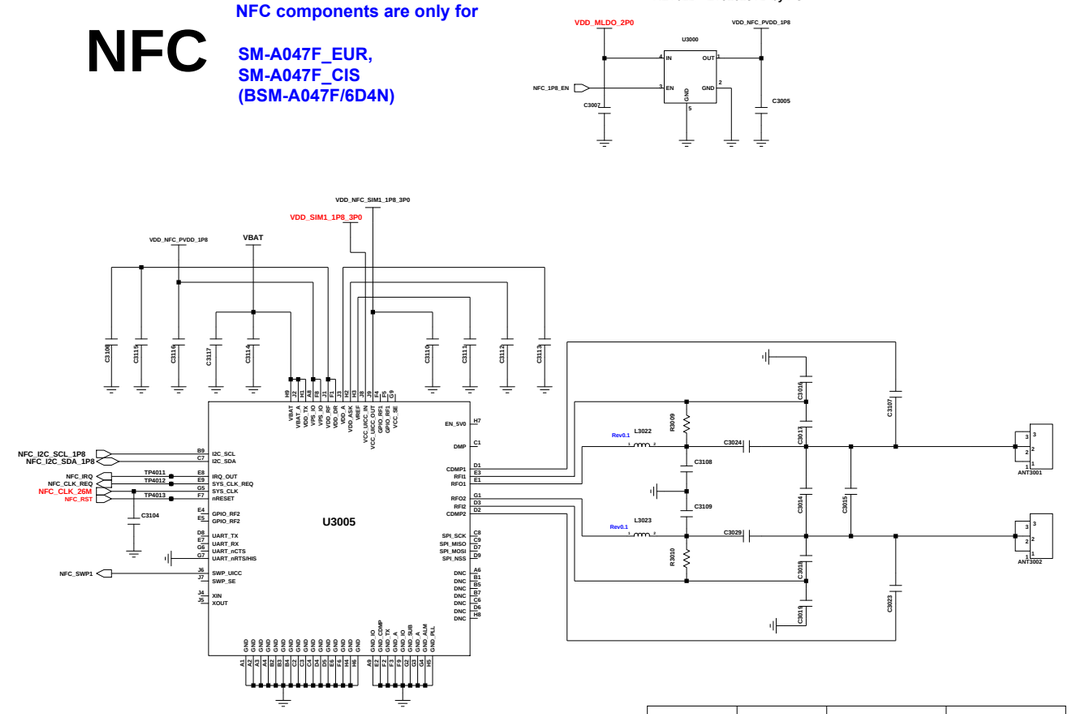

NFC	NFC PART	Power supply of SIM1		NFC GPIO 14	
	U3005	R5017	R5018	R4005	R4006
NFC	CONNECT	short	open	10K ohm	open
nonNFC	NC	open	short	open	10K ohm

SENSORS

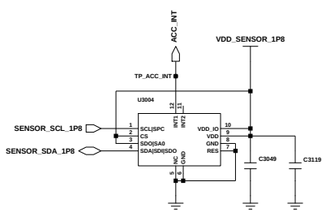

Accel. Sensor

FINGER PRINT SENSOR

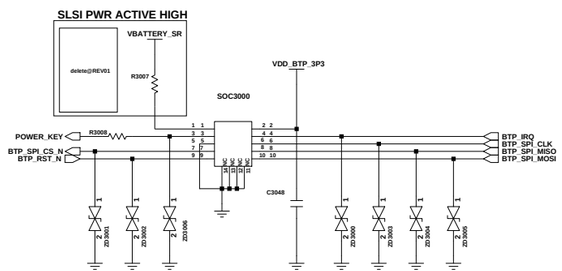

Engineer:	
Drawn by:	
R&D CHK:	TITLE:
DOC CTRL CHK:	
MFG ENGR CHK:	
QA CHK:	

Size:

Changed by:	Date Changed:	Time Changed:	REV:	Drawing Number:	Page:
user93					37

SAMSUNG CONFIDENTIAL
THIS DOCUMENT CONTAINS CONFIDENTIAL
AND PROPRIETARY INFORMATION OF
SAMSUNG ELECTRONICS CO'S PROPERTY.
DO NOT DISCLOSE TO OR DUPLICATE FOR OTHERS
EXCEPT AS AUTHORIZED BY SAMSUNG.

EXYNOS3830 (NACHO)

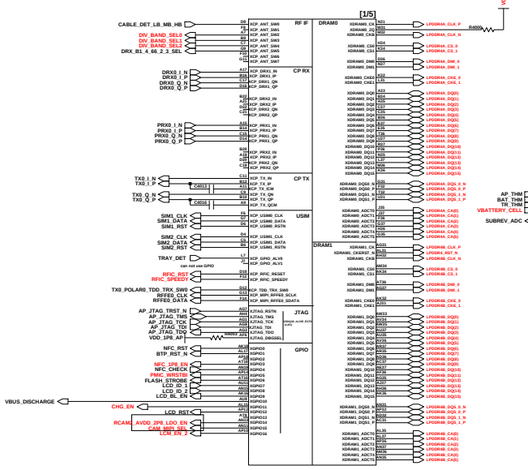

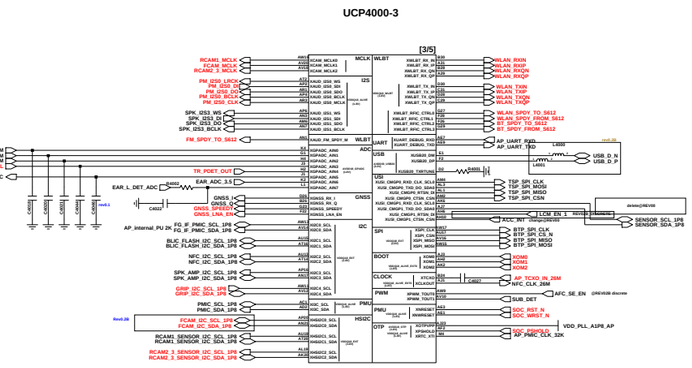

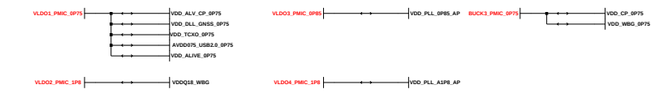

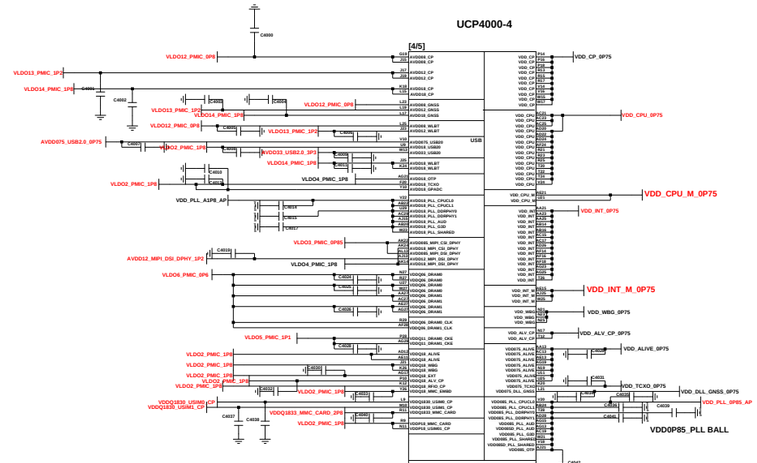

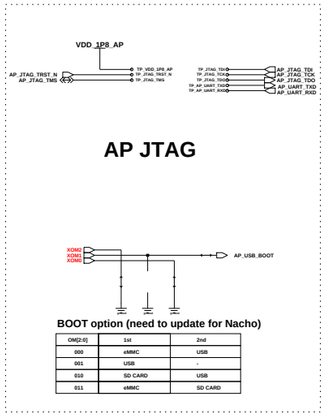

OM[2:0]	1st	2nd
000	eMMC	USB
001	USB	-
010	SD CARD	USB
011	eMMC	SD CARD

H/W Revision Setting

MODEL	REV	HW_VER2	HW_VER1	HW_VER0
A047F	0.0	0	0	0
A047F	0.1, 0.2	0	0	1
A047F	0.2B	0	1	0
A047F	0.2C	0	1	1
A047F	0.3	1	0	0
A047F	0.3C	1	0	1

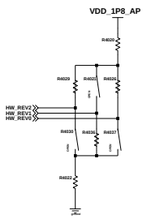

NFC OPTION

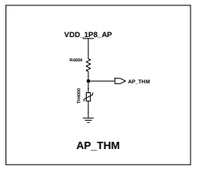

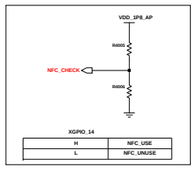

H	NFC_USE
L	NFC_UNUSE

I2C Pull-up Register

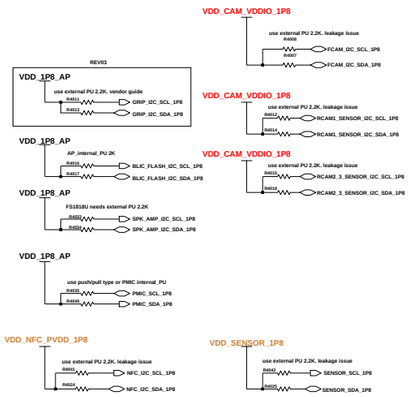

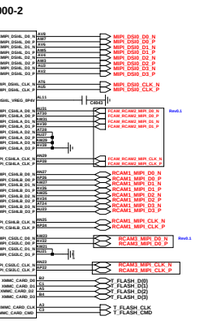

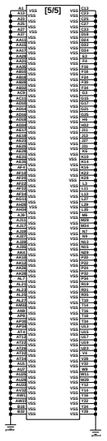

AP Decap

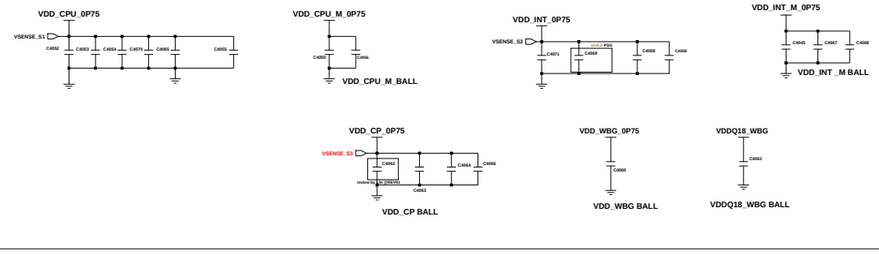

PCB JTAG

Discrete array leakage added

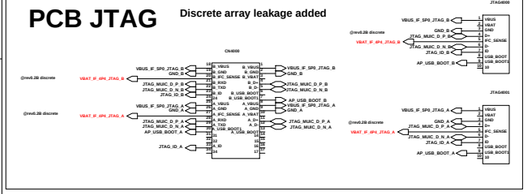

POWER OFF LEAKAG

Discrete array leakage added

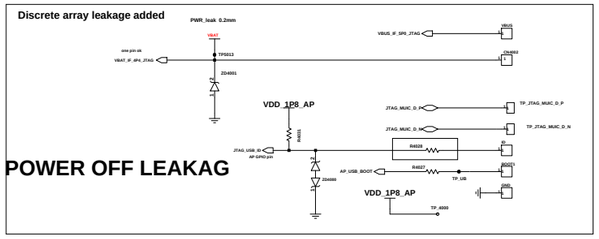

SAMSUNG CONFIDENTIAL
THIS DOCUMENT CONTAINS CONFIDENTIAL
AND PROPRIETARY INFORMATION OF
SAMSUNG ELECTRONICS CO'S PROPERTY.
DO NOT DISCLOSE TO OR DUPLICATE FOR OTHERS
EXCEPT AS AUTHORIZED BY SAMSUNG.

MAIN_PMIC

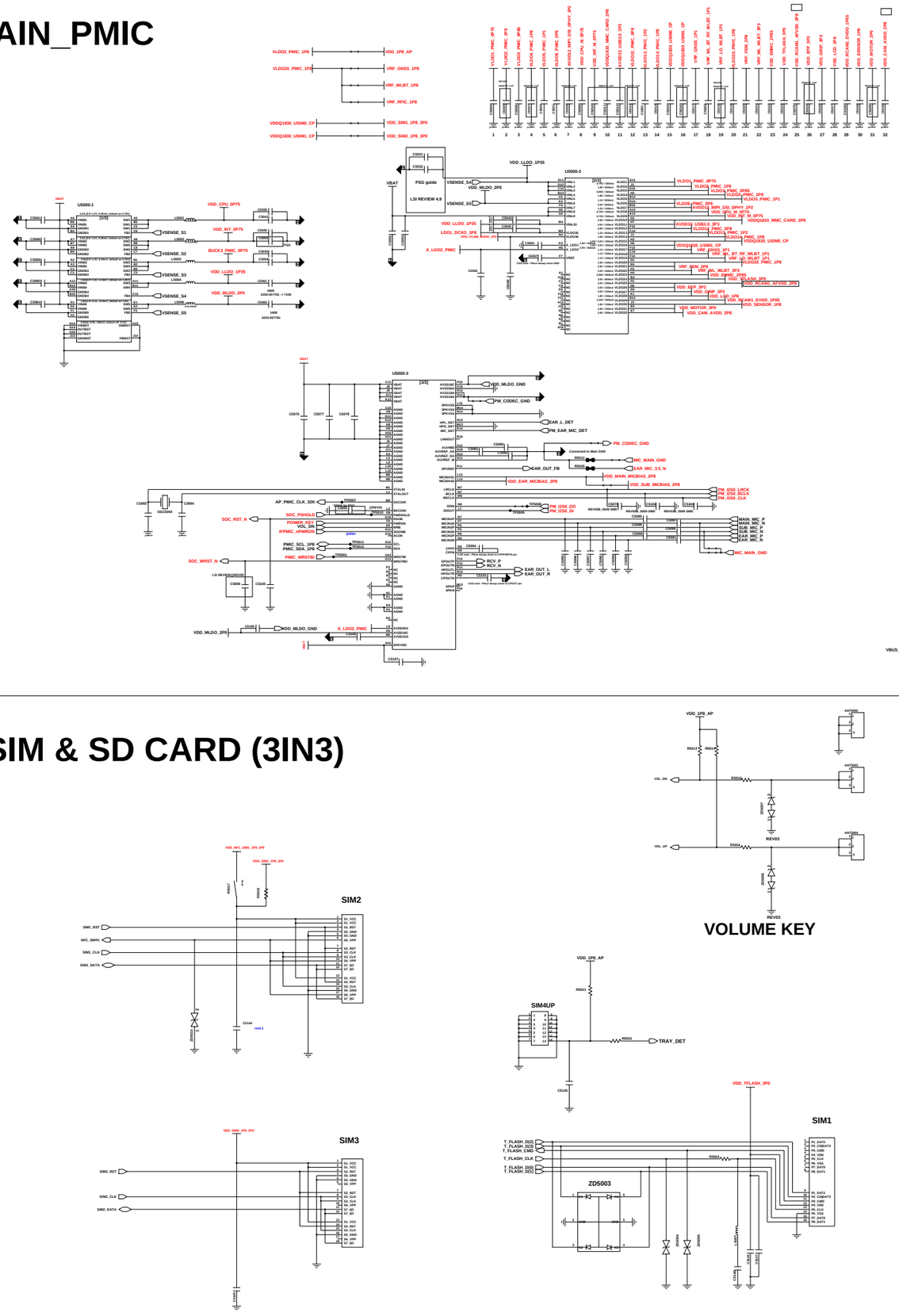

IF_PMIC = Charger SY6970C + F/G MAX17260 + PDIC ET7303

Charger

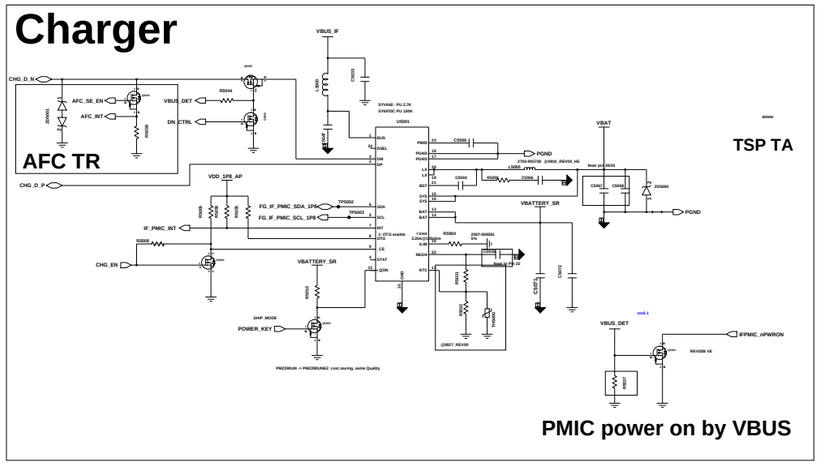

PD IC

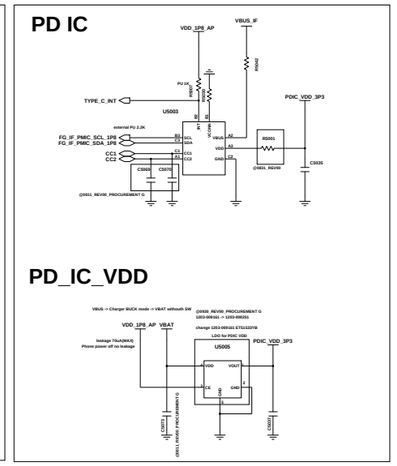

F/G

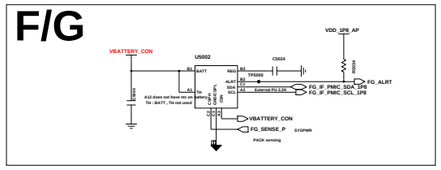

OVP

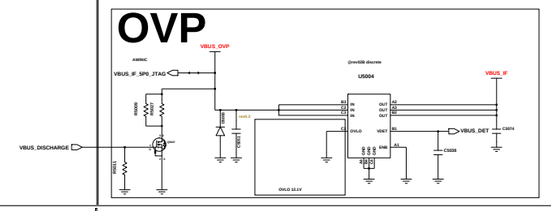

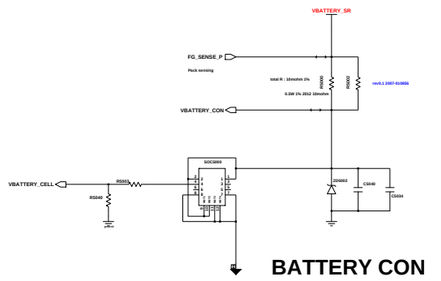

BATTERY CON

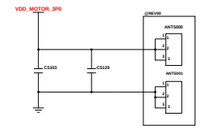

MOTOR

SIM & SD CARD (3IN3)

VOLUME KEY

eMCP

* Default eMCP 3G LPDDR4X & 32GB eMMC 5.1 : 1108 - 000678
eMCP 4G LPDDR4X & 64GB eMMC 5.1 : 1108 - 000725
eMCP 4G LPDDR4X & 128GB eMMC 5.1 : 1108 - 000717

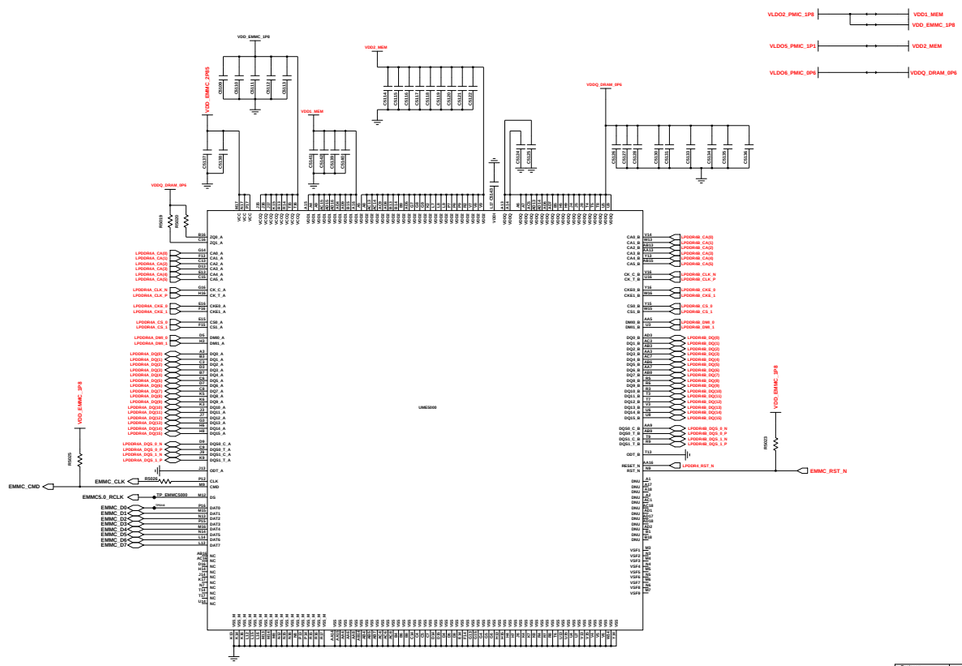

Changed by:	Date Changed:	Time Changed:	Engineer:	
			Drawn by:	
			R&D CHK:	TITLE:
			DOC CTRL CHK:	
			MFG ENGR CHK:	
			QA CHK:	REV: / Drawing Number: / Page 1of

SAMSUNG CONFIDENTIAL
THIS DOCUMENT CONTAINS CONFIDENTIAL PROPRIETARY INFORMATION THAT IS SAMSUNG ELECTRONICS CO'S PROPERTY. DO NOT DISCLOSE TO OR DUPLICATE FOR OTHERS EXCEPT AS AUTHORIZED BY SAMSUNG.

BLIC

COPY FROM A135F

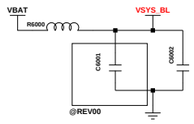

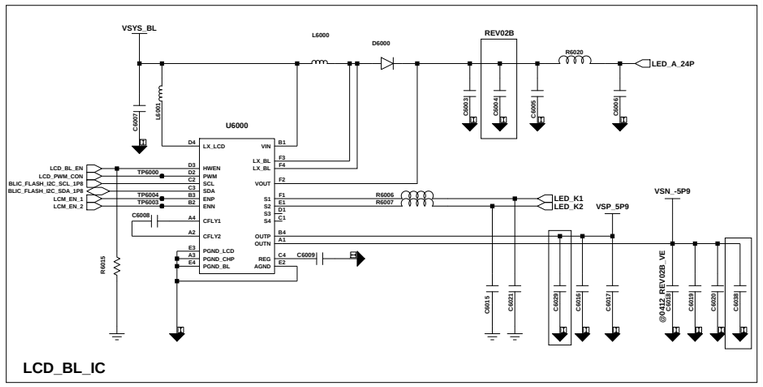

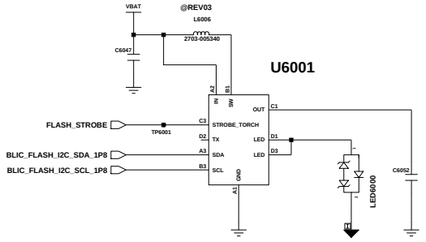

FLASH LED driver IC(new item)

COPY FROM A135F

MAIN FPCB_PART (78pin) 6.5" HD+ TFT V-CUT

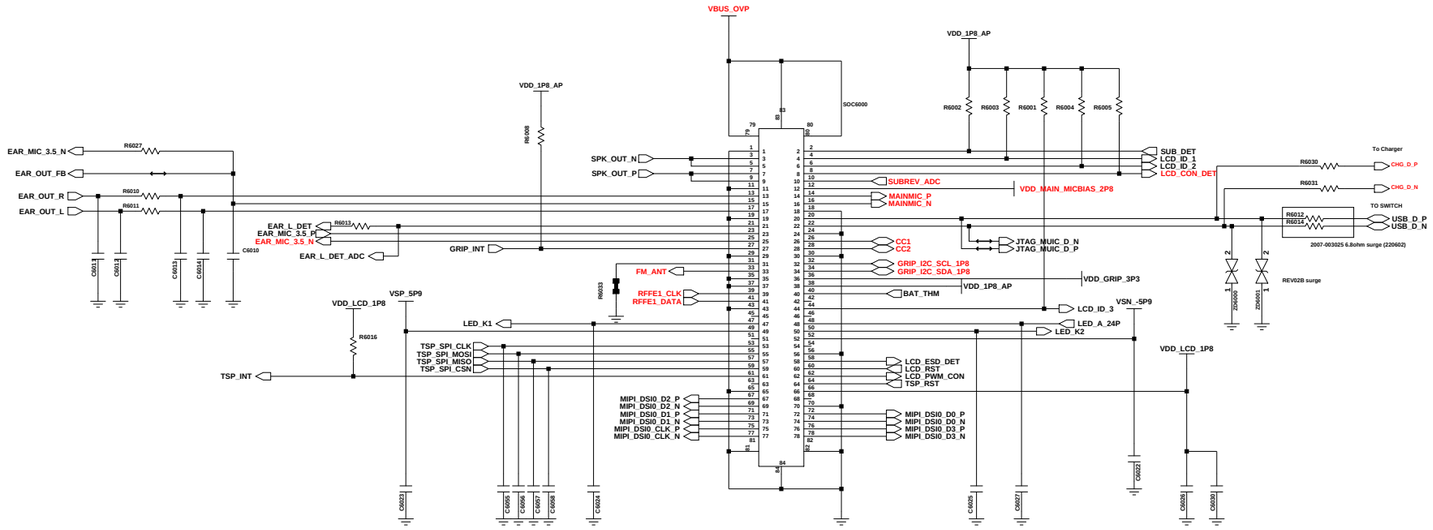

AUDIO_PART

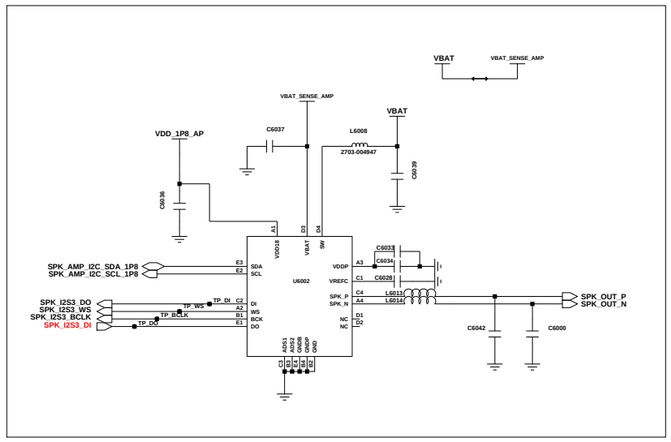

SPK AMP

NEW

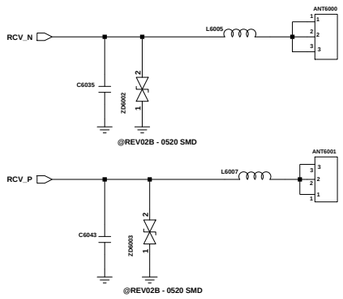

RCV CONTACT

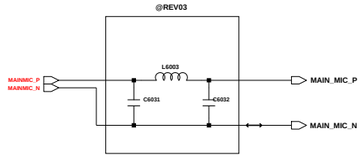

MAIN MIC

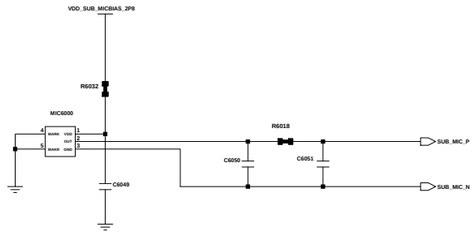

Sub MIC

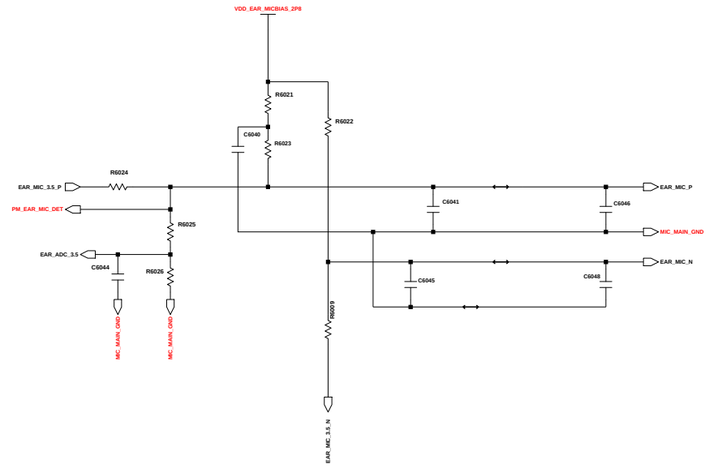

Ear MIC

Engineer:			
Drawn by:			
R&D CHK:	TITLE:		Size:
DOC CTRL CHK:			
MFG ENGR CHK:			
Changed by:	Date Changed:	Time Changed:	QA CHK:
REV	Drawing Number:		Page:6/7

SAMSUNG CONFIDENTIAL
THIS DOCUMENT CONTAINS CONFIDENTIAL
PROPRIETARY INFORMATION THAT IS
SAMSUNG ELECTRONICS CO'S PROPERTY.
DO NOT DISCLOSE TO OR DUPLICATE FOR OTHERS
EXCEPT AS AUTHORIZED BY SAMSUNG.

CAMERA_PART

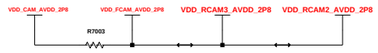

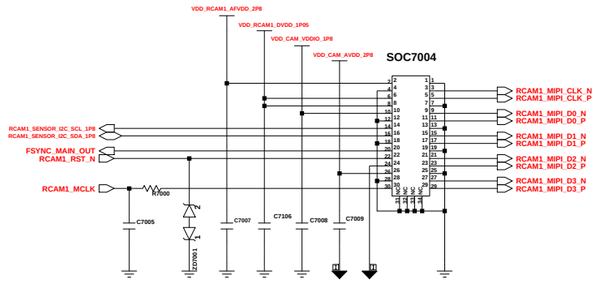

RCAM1_50M(30PIN)

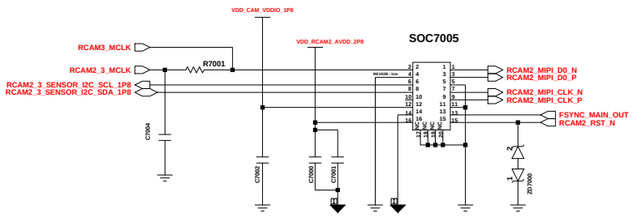

RCAM2_2M BOKEH CAMERA(16PIN)

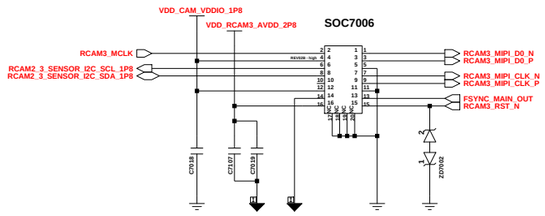

RCAM3_2M MACRO CAMERA(16PIN)

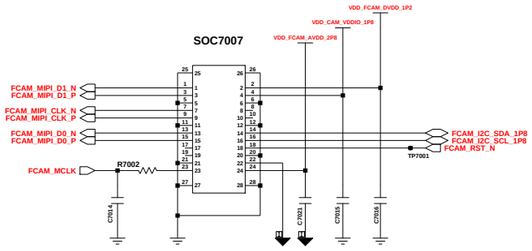

FCAM_5M(24PIN)

SHIELD CAN

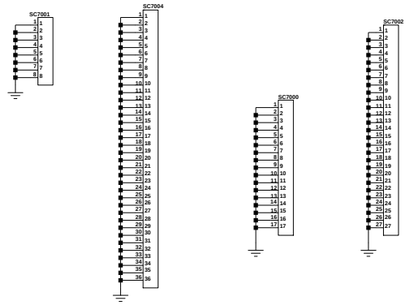

CAM LDO

RCAM1

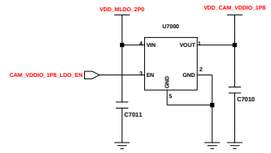

RCAM2/3

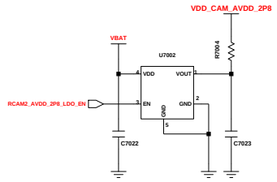

CAMERA MIPI SWITCH

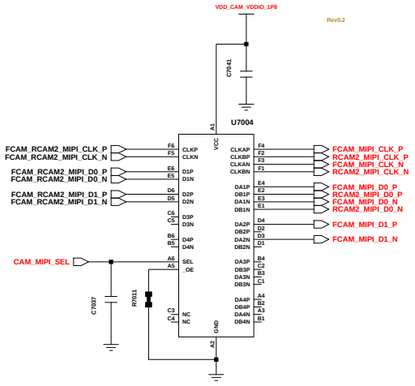

BOSS HOLE

2D BARCODE

RF BAND

NFC

MEMORY

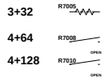

Engineer:	CAMERA, DISPLAY		
Drawn by:			
R&D CHK:	TITLE:	Size:	
DOC CTRL CHK:			
MFG ENGR CHK:			

Changed by:	Date Changed:	Time Changed:	QA CHK:	REV	Drawing Number:	Page: 2/2

SM-A047F_CIS
(BSM-A047F/3R3D,
BSM-A047F/6R4D)
SM-A047F_MEA,
SM-A047F_SEA,
SM-A047F_SWA

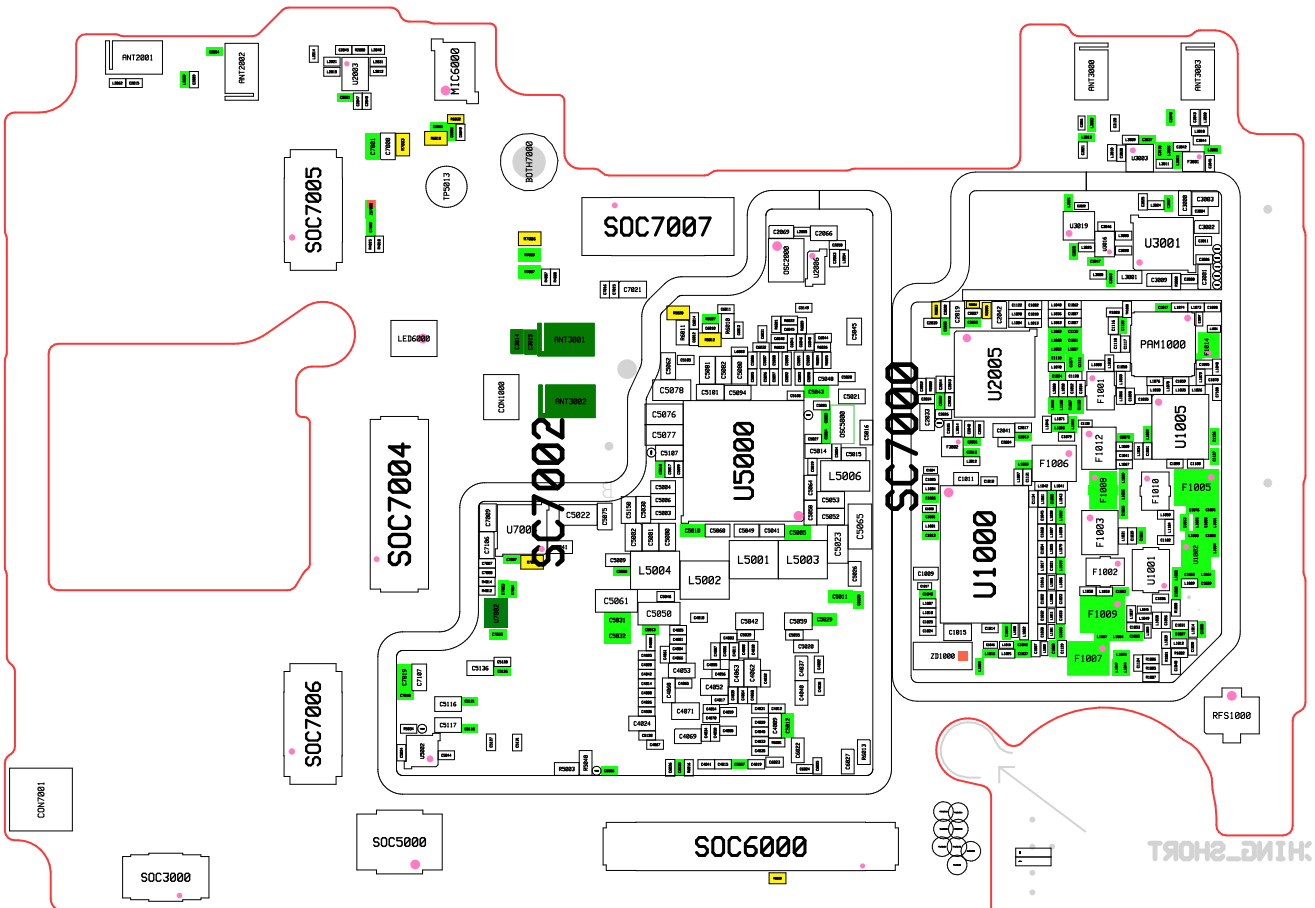

SM-A047F_CIS
(BSM-A047F/3R3D,
BSM-A047F/6R4D)
SM-A047F_MEA,
SM-A047F_SEA,
SM-A047F_SWA

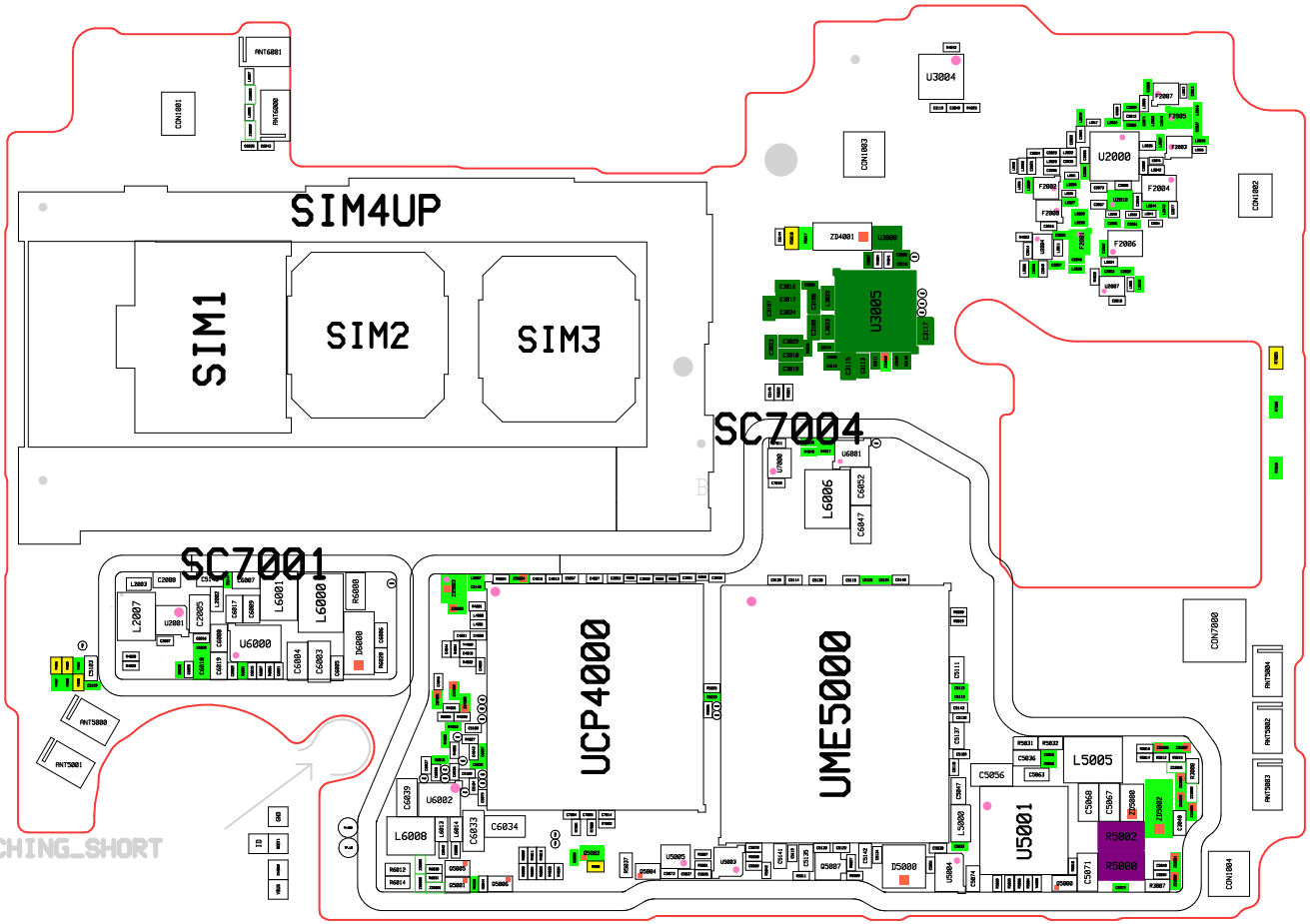

SAMSUNG CONFIDENTIAL
THIS DOCUMENT CONTAINS CONFIDENTIAL
PROPRIETARY INFORMATION THAT IS
SAMSUNG ELECTRONICS CO'S PROPERTY.
DO NOT DISCLOSE TO OR DUPLICATE FOR OTHERS
EXCEPT AS AUTHORIZED BY SAMSUNG.

SM-A047M_REV0.3C

RF LA, NFC X

SM-A047M_LA

sheet01 : GSM / WCDMA / LTE RF

sheet02 : TRANCEIVER, DRX

sheet03 : SENSORS, CONNECTIVITY

sheet04 : EXYNOS3830(NACHO)

sheet05 : PMIC(Main) ,Charger/F/G/PDIC, KEY, MOTOR, eMCP, SD/SIM

sheet06 : AUDIO, DISPLAY, LCD FPCB CON

sheet07 : CAMERA

Engineer:			
Drawn by:			
R&D CHK:	TITLE: A04s		Size:
DOC CTRL CHK:			
MFG ENGR CHK:			
Changed by: user93	Date Changed:	Time Changed:	QA CHK:
REV	Drawing Number:		Page: 0

SAMSUNG CONFIDENTIAL
THIS DOCUMENT CONTAINS CONFIDENTIAL PROPRIETARY INFORMATION THAT IS SAMSUNG ELECTRONICS CO'S PROPERTY. DO NOT DISCLOSE TO OR DUPLICATE FOR OTHERS EXCEPT AS AUTHORIZED BY SAMSUNG.

	CIS	LA
FDD	1/ 3/ 5/ 7/ 8/ 20/ 28	1/2/ 3/4/ 5/ 7/ 8/12/13/17/26/28/66
TDD	38/ 40/ 41	38/ 40/ 41
3G	1/ 5/ 8	1/2/4/ 5/ 8
2G	850/900/1800	850/900/1800/1900

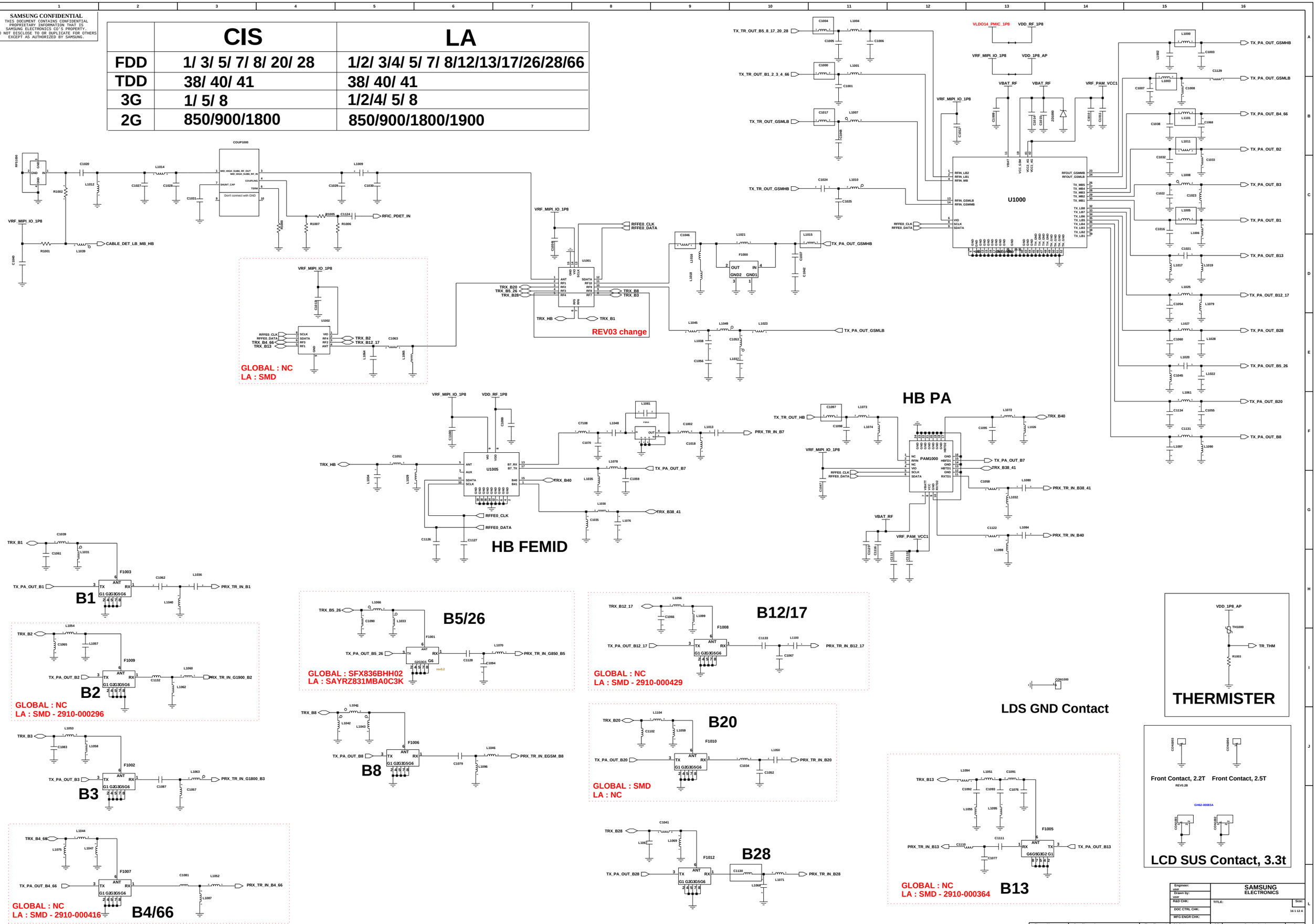

SAMSUNG CONFIDENTIAL
THIS DOCUMENT CONTAINS CONFIDENTIAL
PROPRIETARY INFORMATION THAT IS
SAMSUNG ELECTRONICS CO'S PROPERTY.
DO NOT DISCLOSE TO OR DUPLICATE FOR OTHERS
EXCEPT AS AUTHORIZED BY SAMSUNG.

DRX

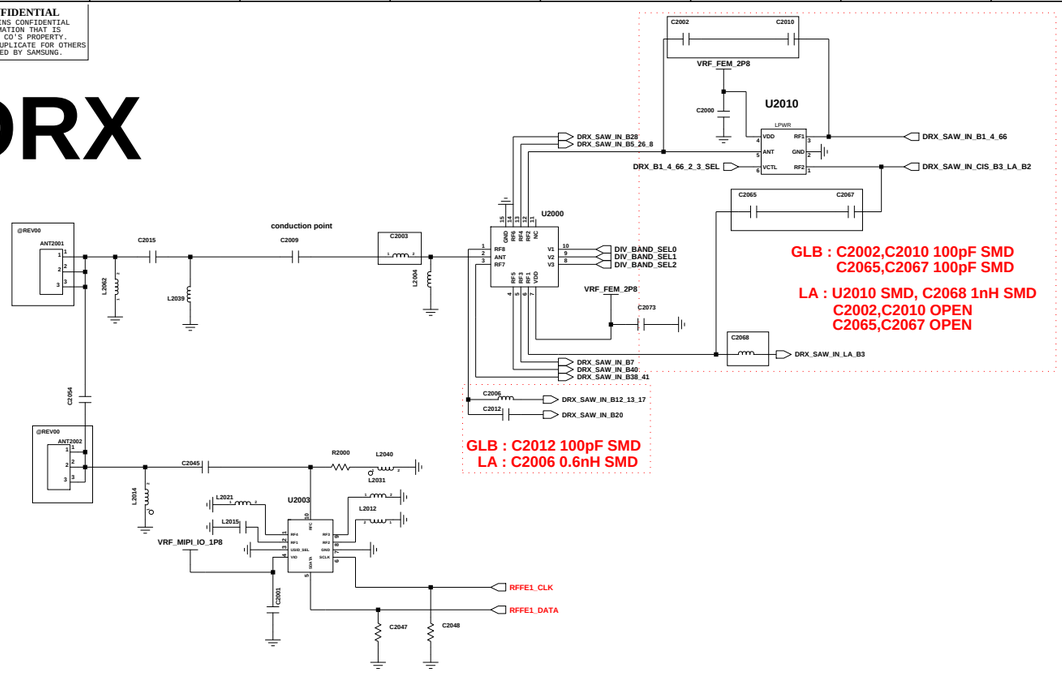

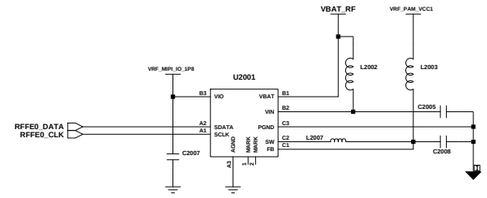

APT MODULATOR

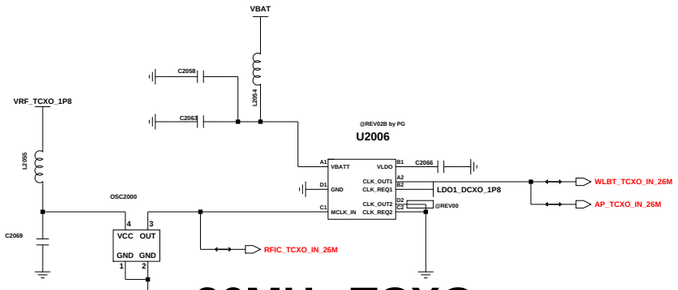

26MHz TCXO

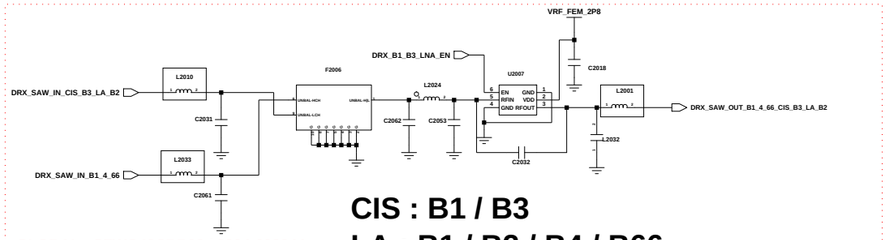

GLOBAL : SFWG42CBB02 / 2904-002344
LA : SAWFD1G96AC2F3K / 2904-002368

CIS : B1 / B3
LA : B1 / B2 / B4 / B66

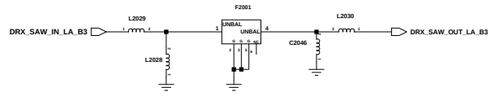

LA B3

GLOBAL : NC
LA : SAFFB1G84AB0F0A(2904-002190) SMD

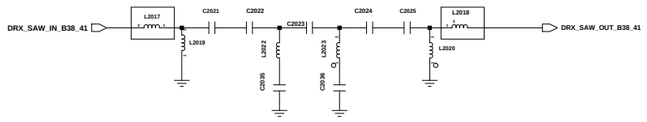

B38 / B41

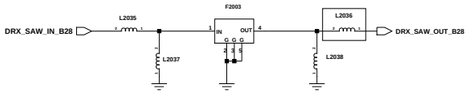

B28

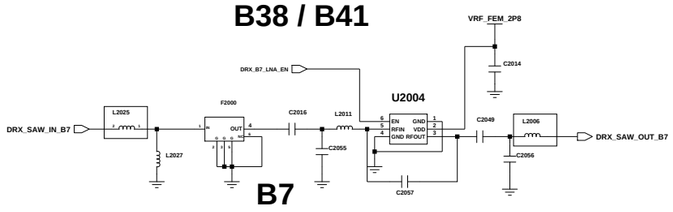

B7

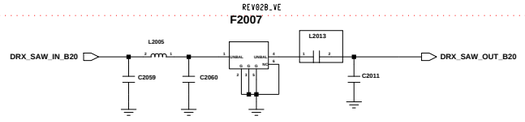

GLOBAL : SMD
LA : NC

B20

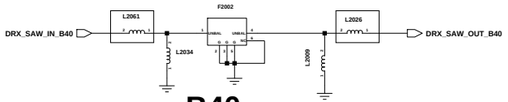

B40

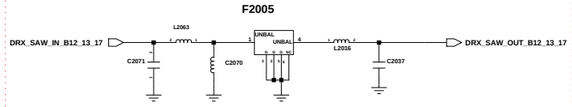

GLOBAL : NC
LA : SMD - 2904-002304

B12 / B13 / B17

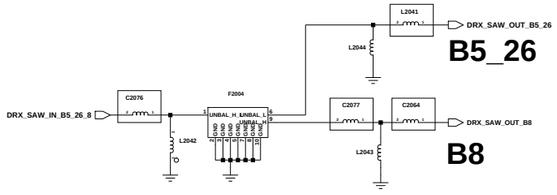

B5_26
B8

B5_26/ B8

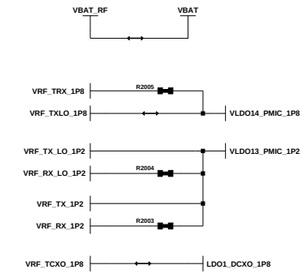

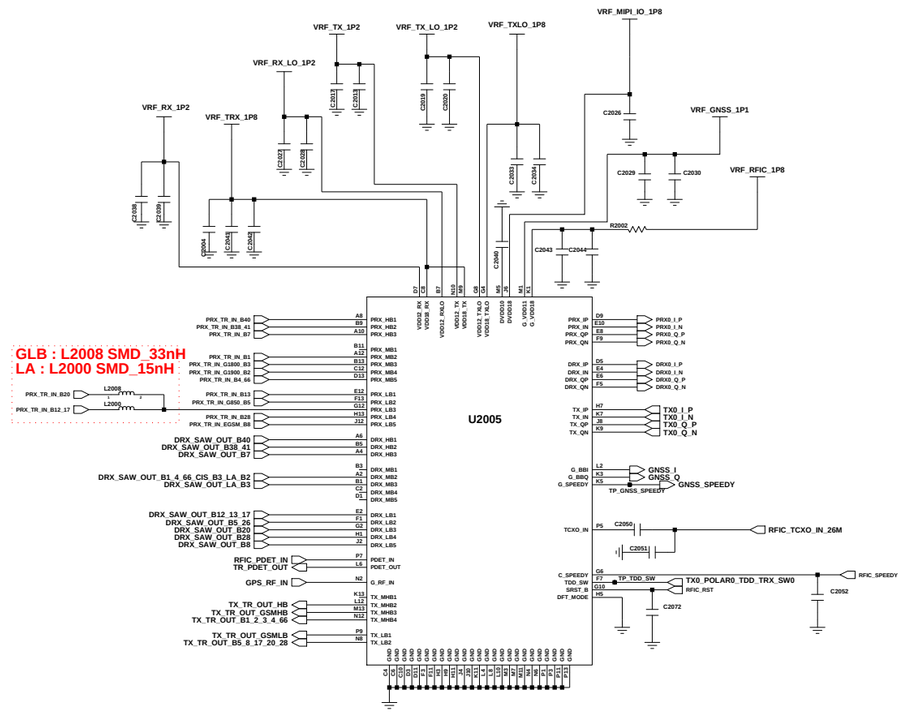

TRANSCEIVER

Engineer			
Drawn by:			
R&D CHK:		TITLE:	Size:
DOC CTRL CHK:			
MFG ENGR CHK:			
Changed by:	Date Changed:	Time Changed:	QA CHK:
Drawing Number	2/7		

SAMSUNG CONFIDENTIAL
THIS DOCUMENT CONTAINS CONFIDENTIAL
PROPRIETARY INFORMATION THAT IS
SAMSUNG ELECTRONICS CO'S PROPERTY.
DO NOT DISCLOSE TO OR DUPLICATE FOR OTHERS
EXCEPT AS AUTHORIZED BY SAMSUNG.

BT/WIFI

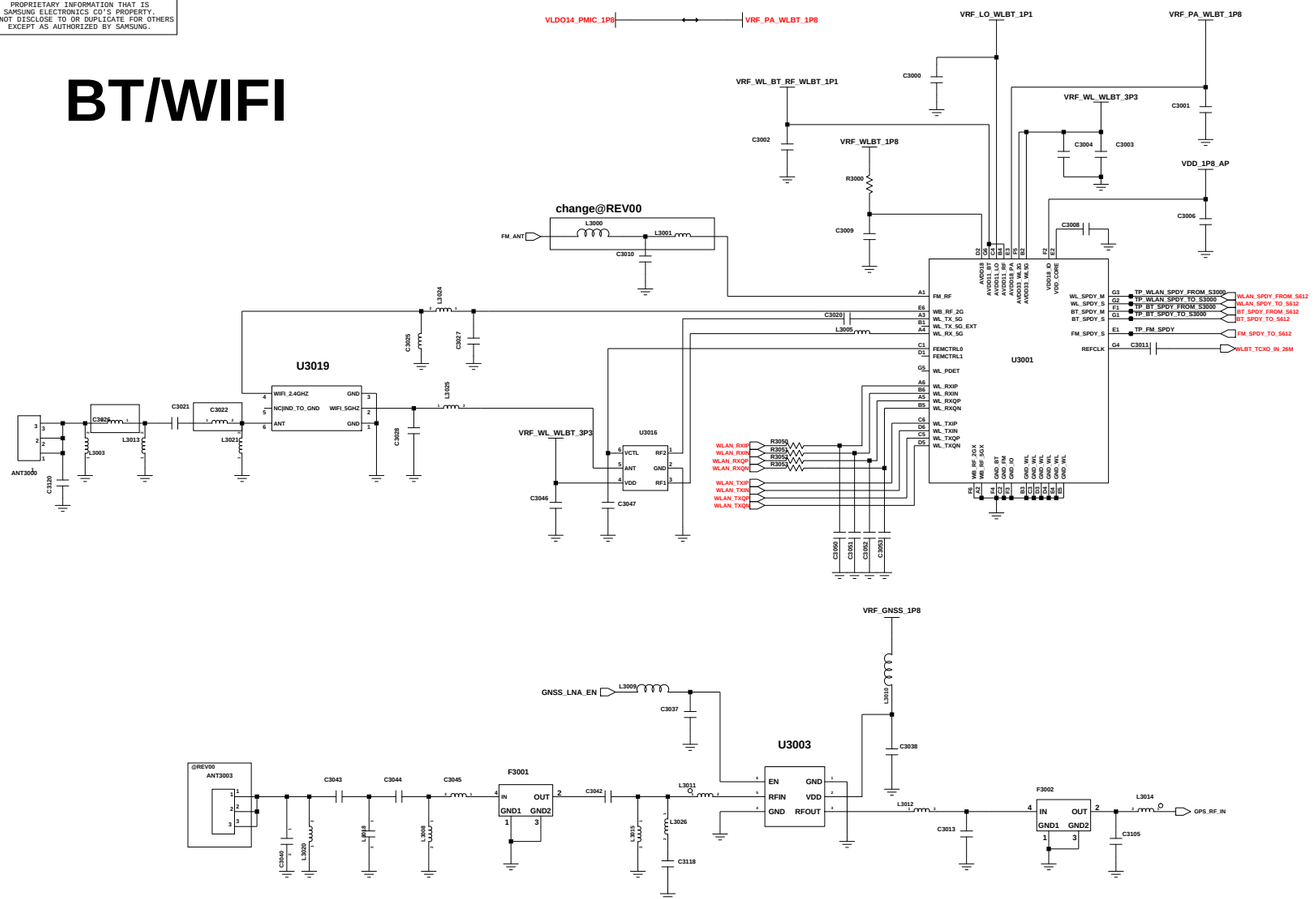

NFC

NFC components are only for

SM-A047F_EUR,
SM-A047F_CIS
(BSM-A047F/6D4N)

REV02B : ET51618YB by PG

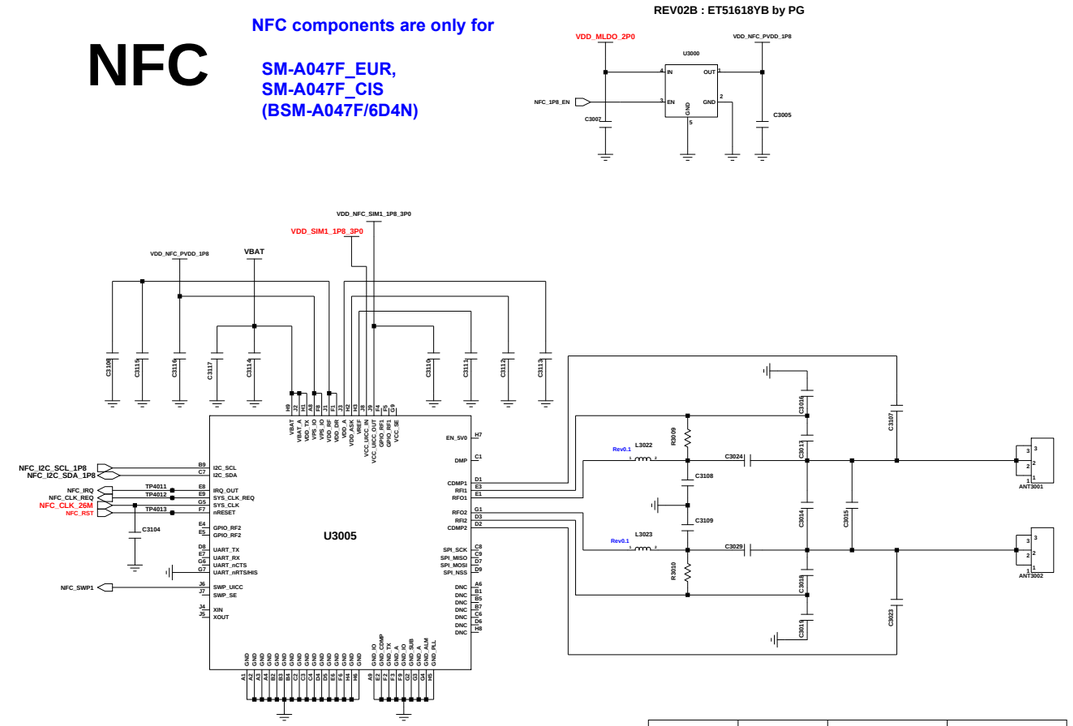

NFC	NFC PART	Power supply of SIM1		NFC GPIO 14	
	U3005	R5017	R5018	R4005	R4006
NFC	CONNECT	short	open	10K ohm	open
nonNFC	NC	open	short	open	10K ohm

SENSORS

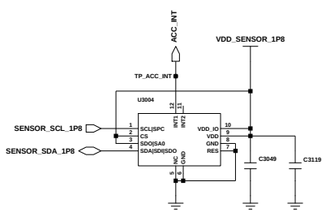

Accel. Sensor

FINGER PRINT SENSOR

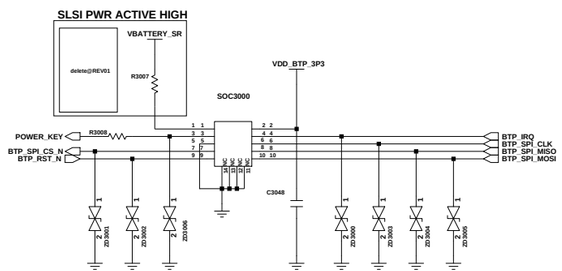

Engineer:	
Drawn by:	
R&D CHK:	TITLE:
DOC CTRL CHK:	
MFG ENGR CHK:	

Size:

Changed by:	Date Changed:	Time Changed:	QA CHK:	REV:	Drawing Number:	Page:
user93						37

SAMSUNG CONFIDENTIAL
THIS DOCUMENT CONTAINS CONFIDENTIAL
AND PROPRIETARY INFORMATION OF
SAMSUNG ELECTRONICS CO'S PROPERTY.
DO NOT DISCLOSE TO OR DUPLICATE FOR OTHERS
EXCEPT AS AUTHORIZED BY SAMSUNG.

EXYNOS3830 (NACHO)

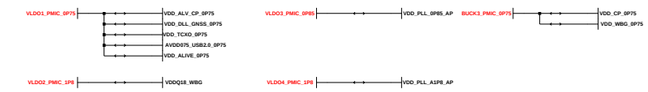

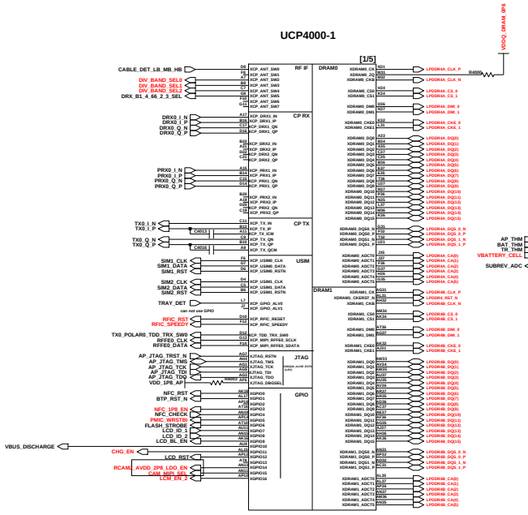

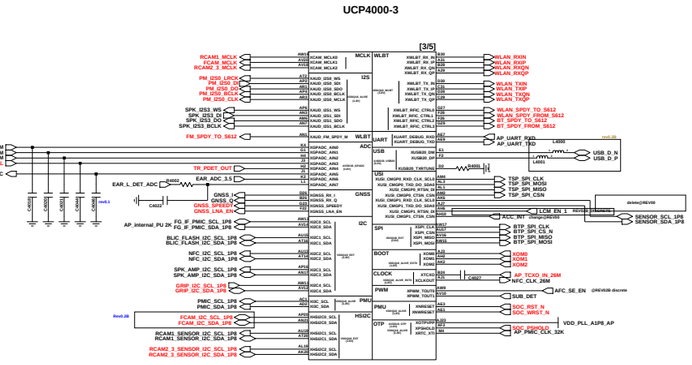

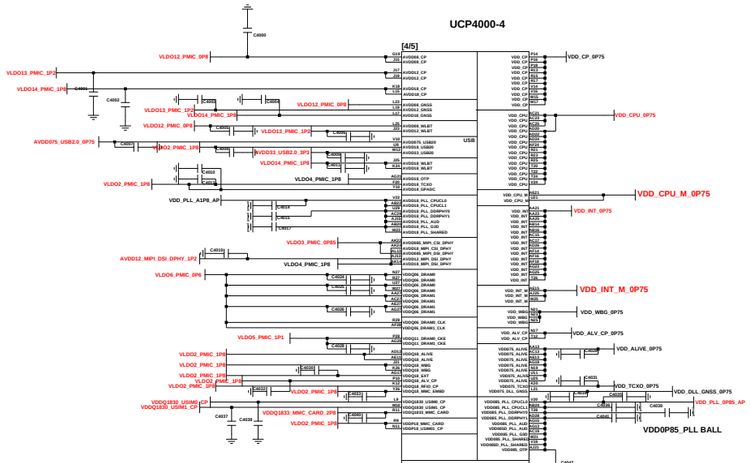

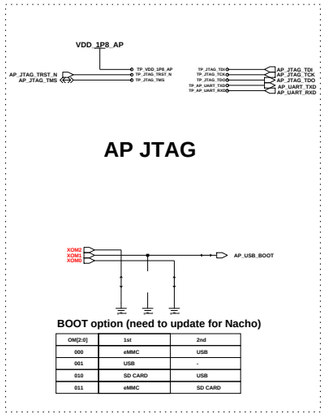

AP JTAG

BOOT option (need to update for Nacho)

OM[2:0]	1st	2nd
000	eMMC	USB
001	USB	-
010	SD CARD	USB
011	eMMC	SD CARD

H/W Revision Setting

MODEL	REV	HW_VER2	HW_VER1	HW_VER0
A047F	0.0	0	0	0
A047F	0.1, 0.2	0	0	1
A047F	0.2B	0	1	0
A047F	0.2C	0	1	1
A047F	0.3	1	0	0
A047F	0.3C	1	0	1

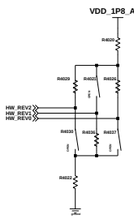

NFC OPTION

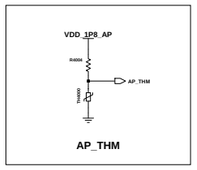

AP_THM

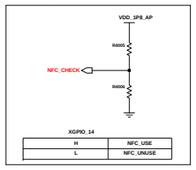

I2C Pull-up Register

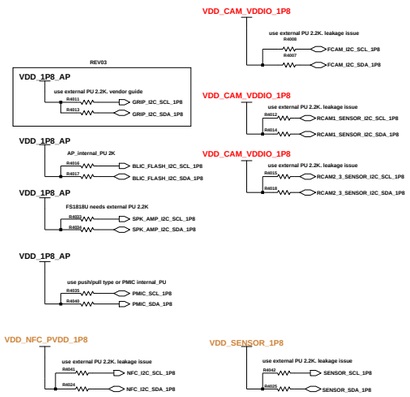

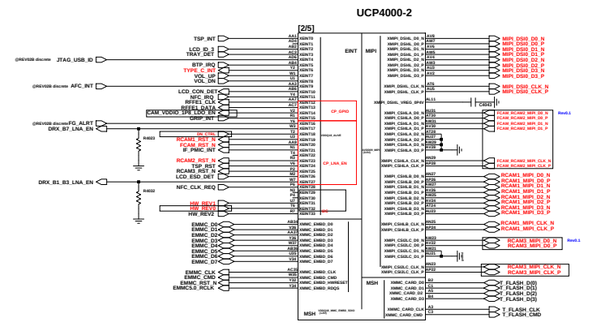

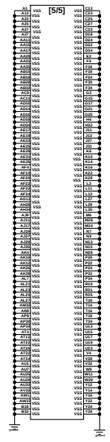

PCB JTAG

Discrete array leakage added

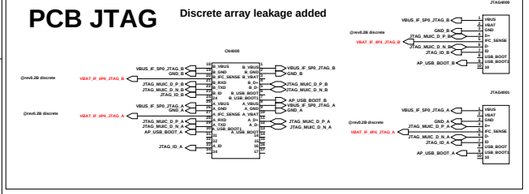

POWER OFF LEAKAG

Discrete array leakage added

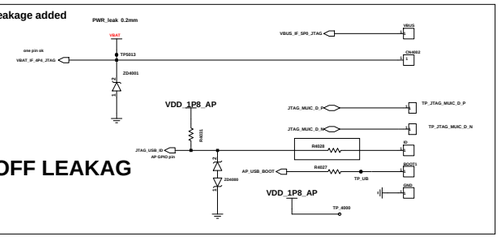

AP Decap

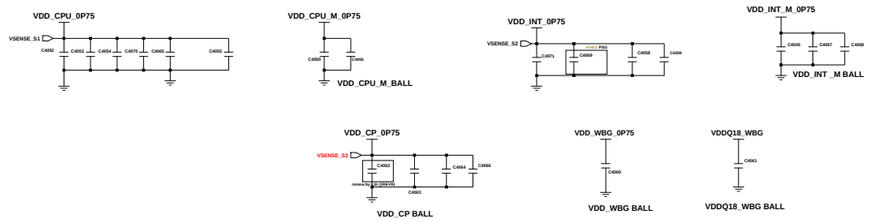

SAMSUNG CONFIDENTIAL
THIS DOCUMENT CONTAINS CONFIDENTIAL
AND PROPRIETARY INFORMATION OF
SAMSUNG ELECTRONICS CO'S PROPERTY.
DO NOT DISCLOSE TO OR DUPLICATE FOR OTHERS
EXCEPT AS AUTHORIZED BY SAMSUNG.

IF_PMIC = Charger SY6970C + F/G MAX17260 + PDIC ET7303

MAIN_PMIC

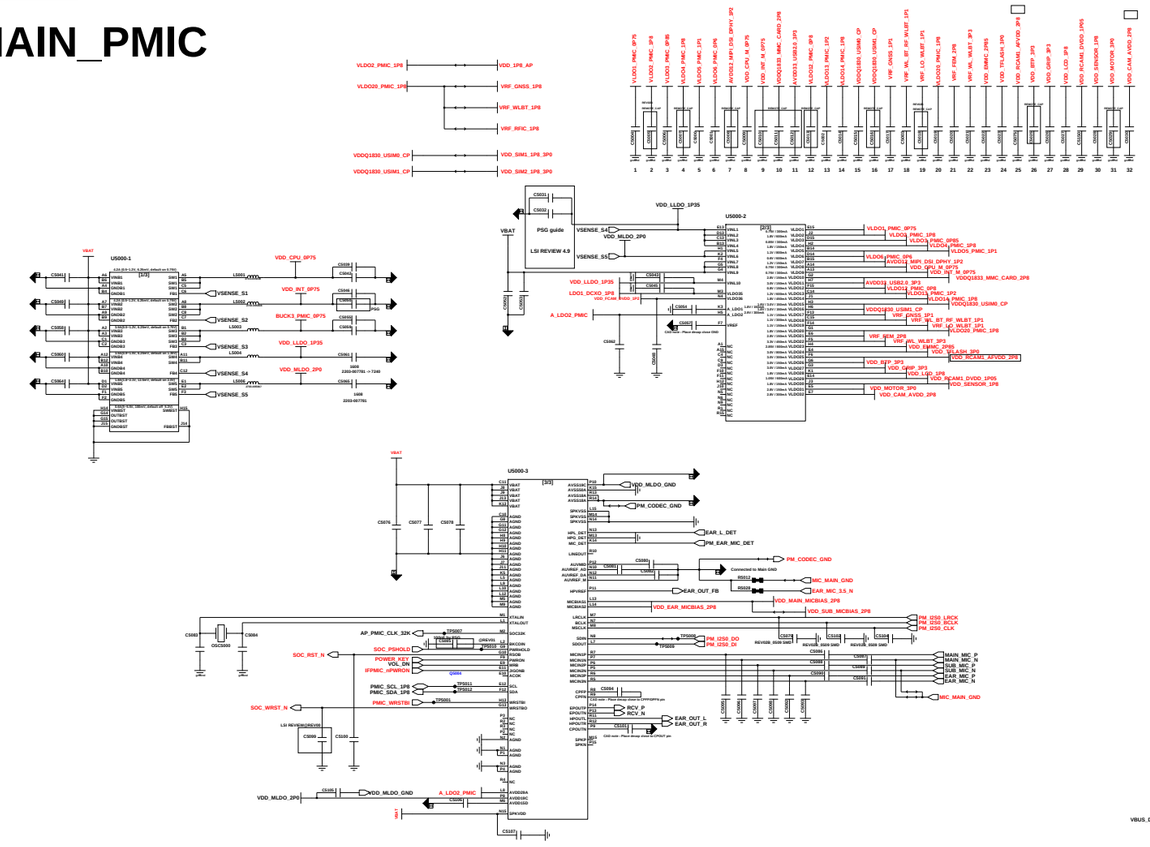

Charger

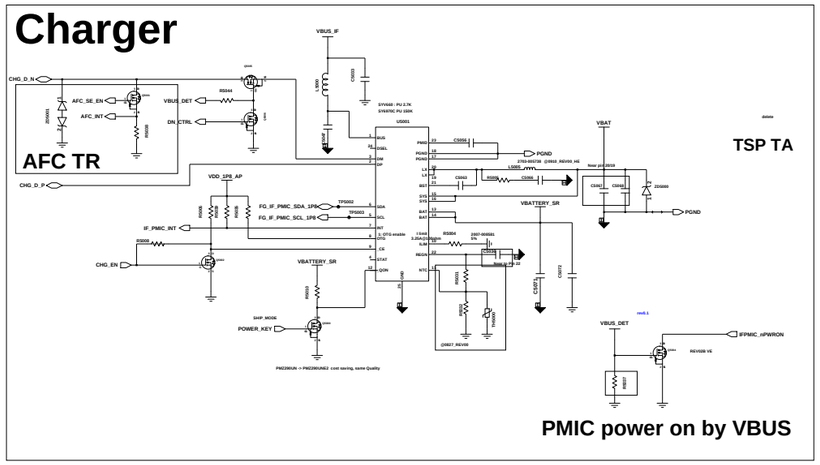

PD IC

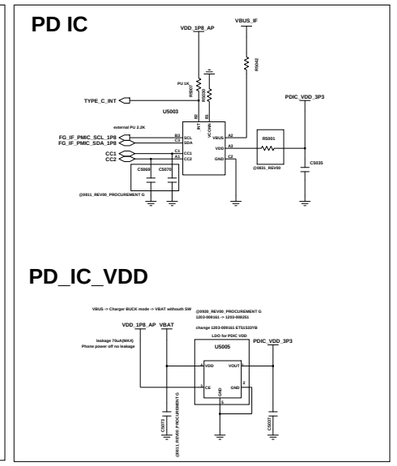

F/G

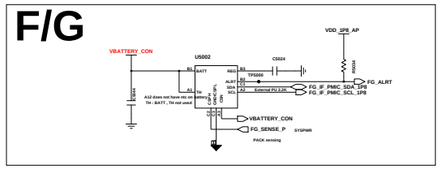

OVP

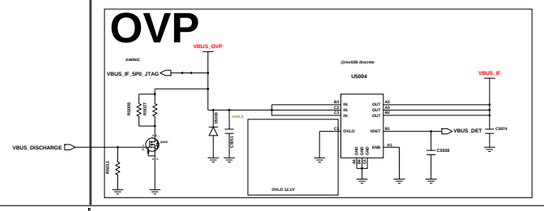

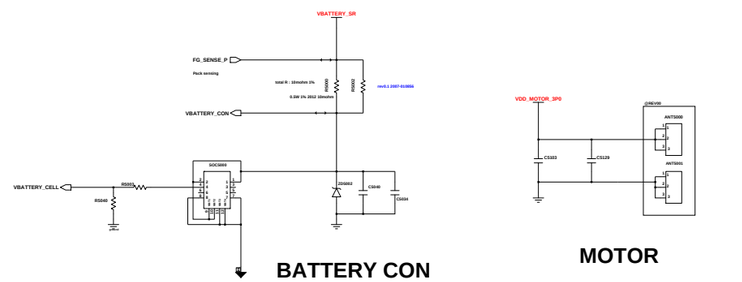

SIM & SD CARD (3IN3)

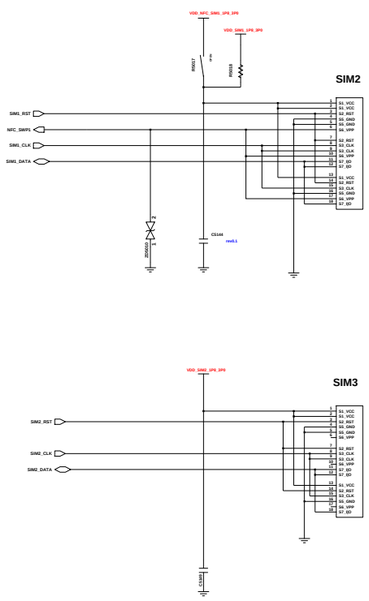

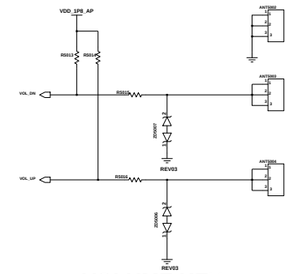

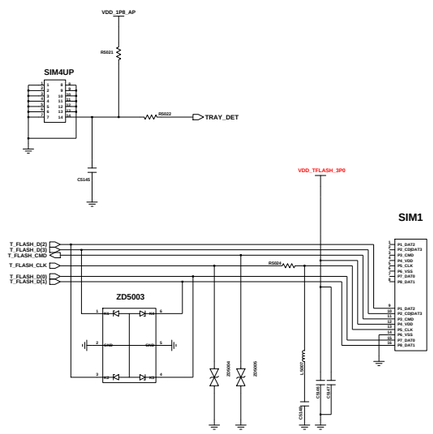

eMCP

* Default eMCP 3G LPDDR4X & 32GB eMMC 5.1 : 1108 - 000678
eMCP 4G LPDDR4X & 64GB eMMC 5.1 : 1108 - 000725
eMCP 4G LPDDR4X & 128GB eMMC 5.1 : 1108 - 000717

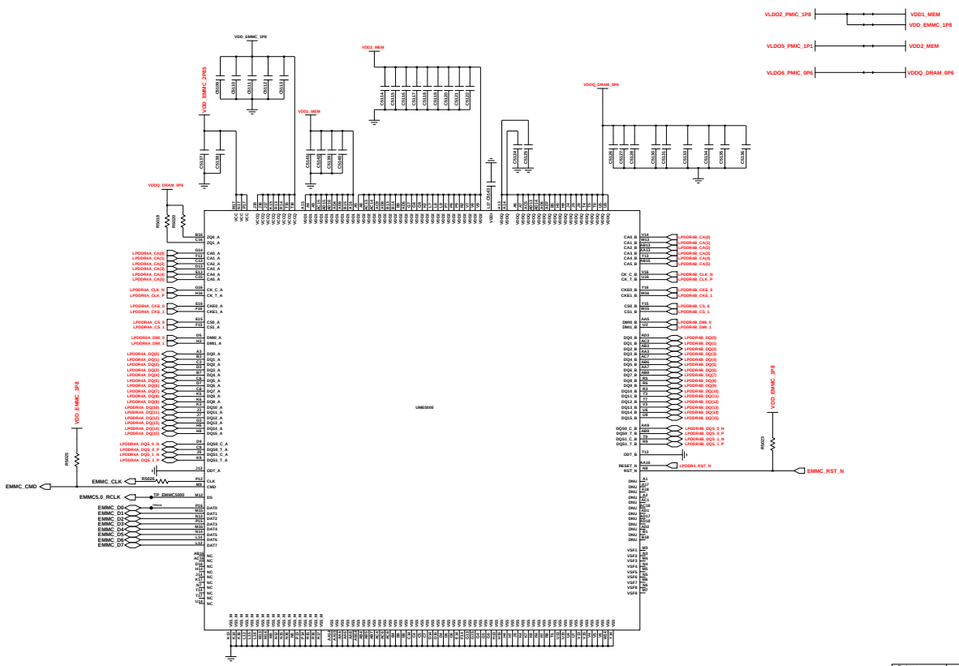

Engineer:	
Drawn by:	
R&D CHK:	TITLE:
DOC CTRL CHK:	
MFG ENGR CHK:	
QA CHK:	REV: Drawing Number: Page:1p1

Changed by:	Date Changed:	Time Changed:

SAMSUNG CONFIDENTIAL
THIS DOCUMENT CONTAINS CONFIDENTIAL PROPRIETARY INFORMATION THAT IS SAMSUNG ELECTRONICS CO'S PROPERTY. DO NOT DISCLOSE TO OR DUPLICATE FOR OTHERS EXCEPT AS AUTHORIZED BY SAMSUNG.

BLIC

COPY FROM A135F

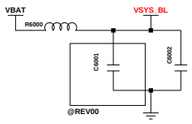

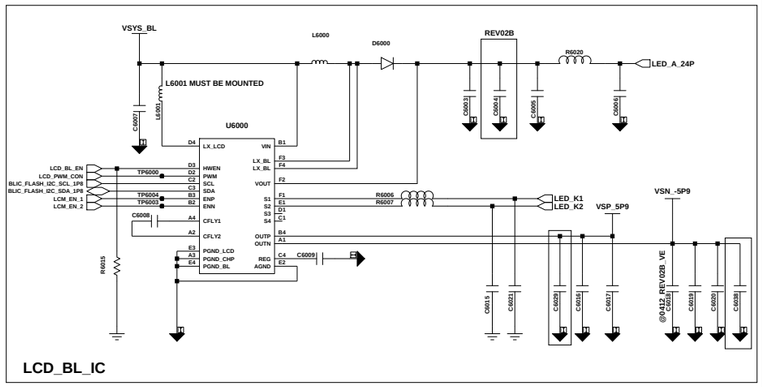

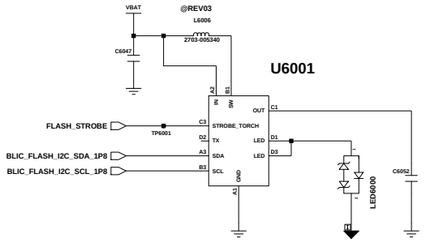

FLASH LED driver IC(new item)

COPY FROM A135F

MAIN FPCB_PART (78pin) 6.5" HD+ TFT V-CUT

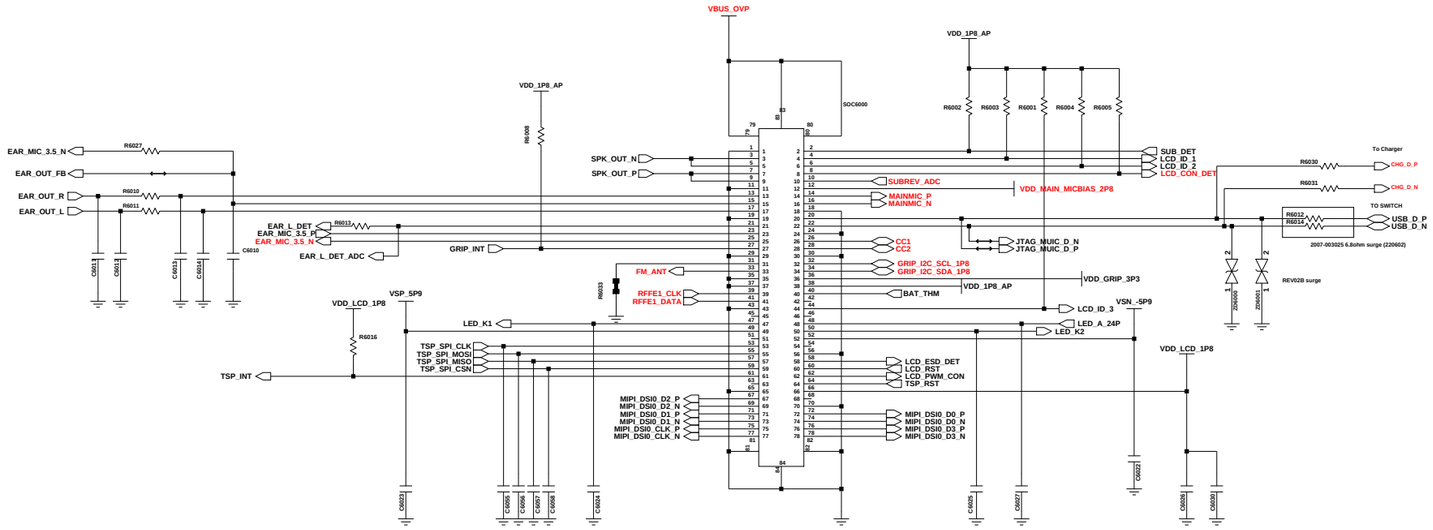

AUDIO_PART

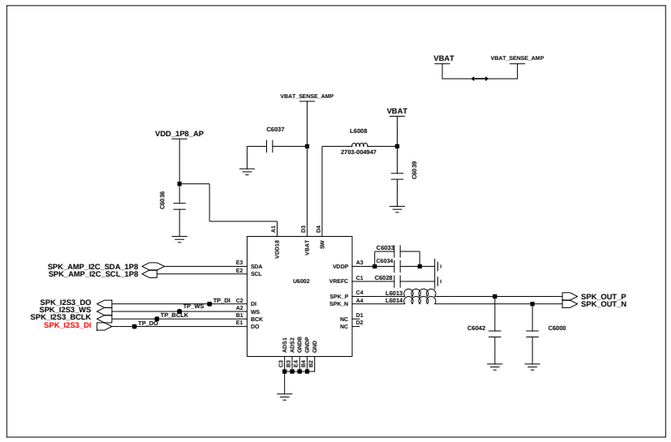

SPK AMP

NEW

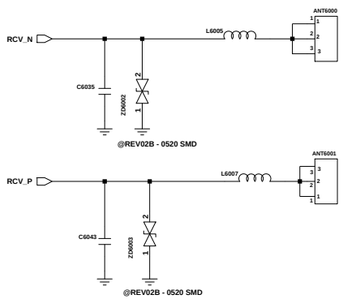

RCV CONTACT

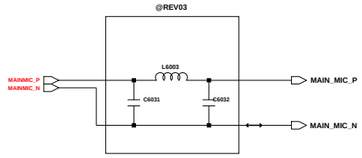

MAIN MIC

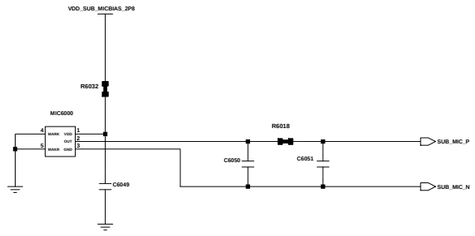

Sub MIC

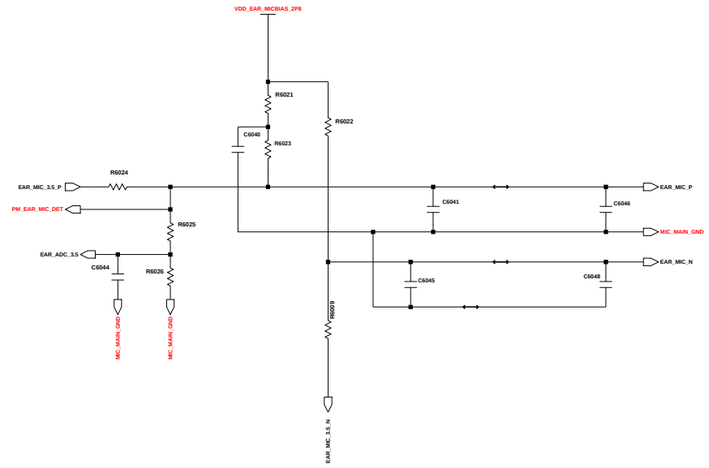

Ear MIC

Engineer:			
Drawn by:			
R&D CHK:	TITLE:		Size:
DOC CTRL CHK:			
MFG ENGR CHK:			
Changed by:	Date Changed:	Time Changed:	QA CHK:
REV	Drawing Number:		Page:6/7

SAMSUNG CONFIDENTIAL
THIS DOCUMENT CONTAINS CONFIDENTIAL
PROPRIETARY INFORMATION THAT IS
SAMSUNG ELECTRONICS CO'S PROPERTY.
DO NOT DISCLOSE TO OR DUPLICATE FOR OTHERS
EXCEPT AS AUTHORIZED BY SAMSUNG.

CAMERA_PART

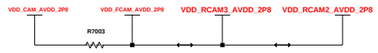

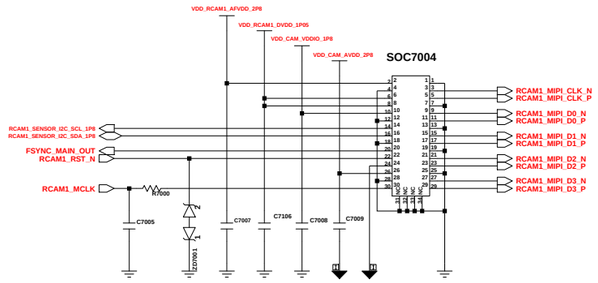

RCAM1_50M(30PIN)

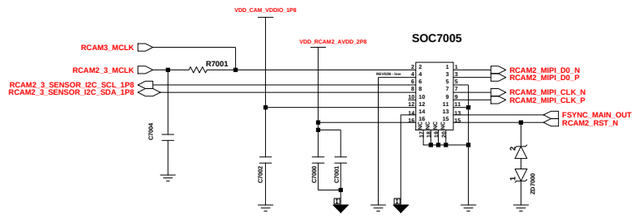

RCAM2_2M BOKEH CAMERA(16PIN)

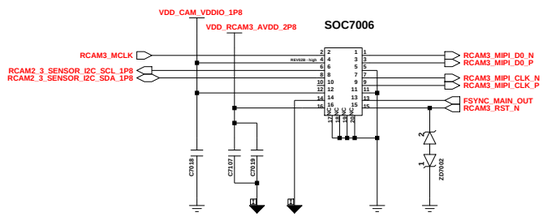

RCAM3_2M MACRO CAMERA(16PIN)

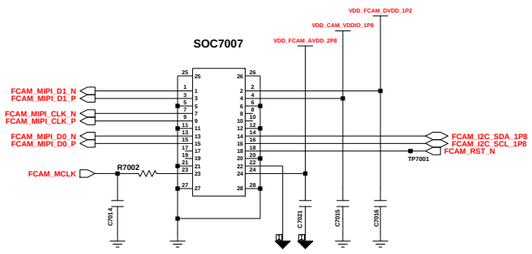

FCAM_5M(24PIN)

SHIELD CAN

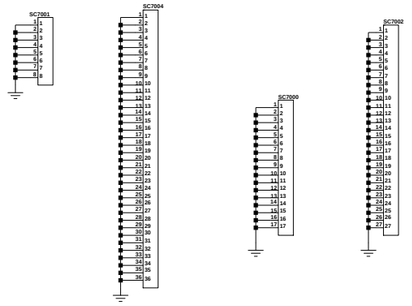

CAM LDO

RCAM1

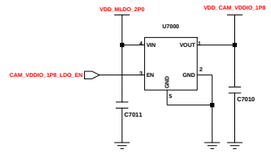

RCAM2/3

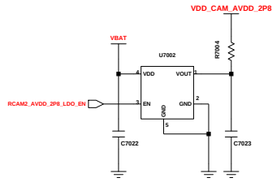

CAMERA MIPI SWITCH

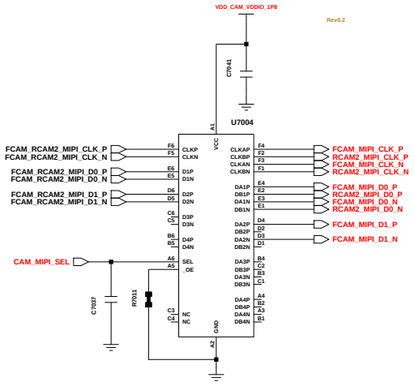

BOSS HOLE

2D BARCODE

RF BAND

NFC

MEMORY

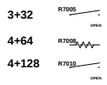

Engineer:							
Drawn by:					CAMERA, DISPLAY		
R&D CHK:					TITLE:		Size:
DOC CTRL CHK:							
MFG ENGR CHK:							
Changed by:	Date Changed:	Time Changed:	QA CHK:	REV	Drawing Number:		Page: 2/2

SM-A047M_LA

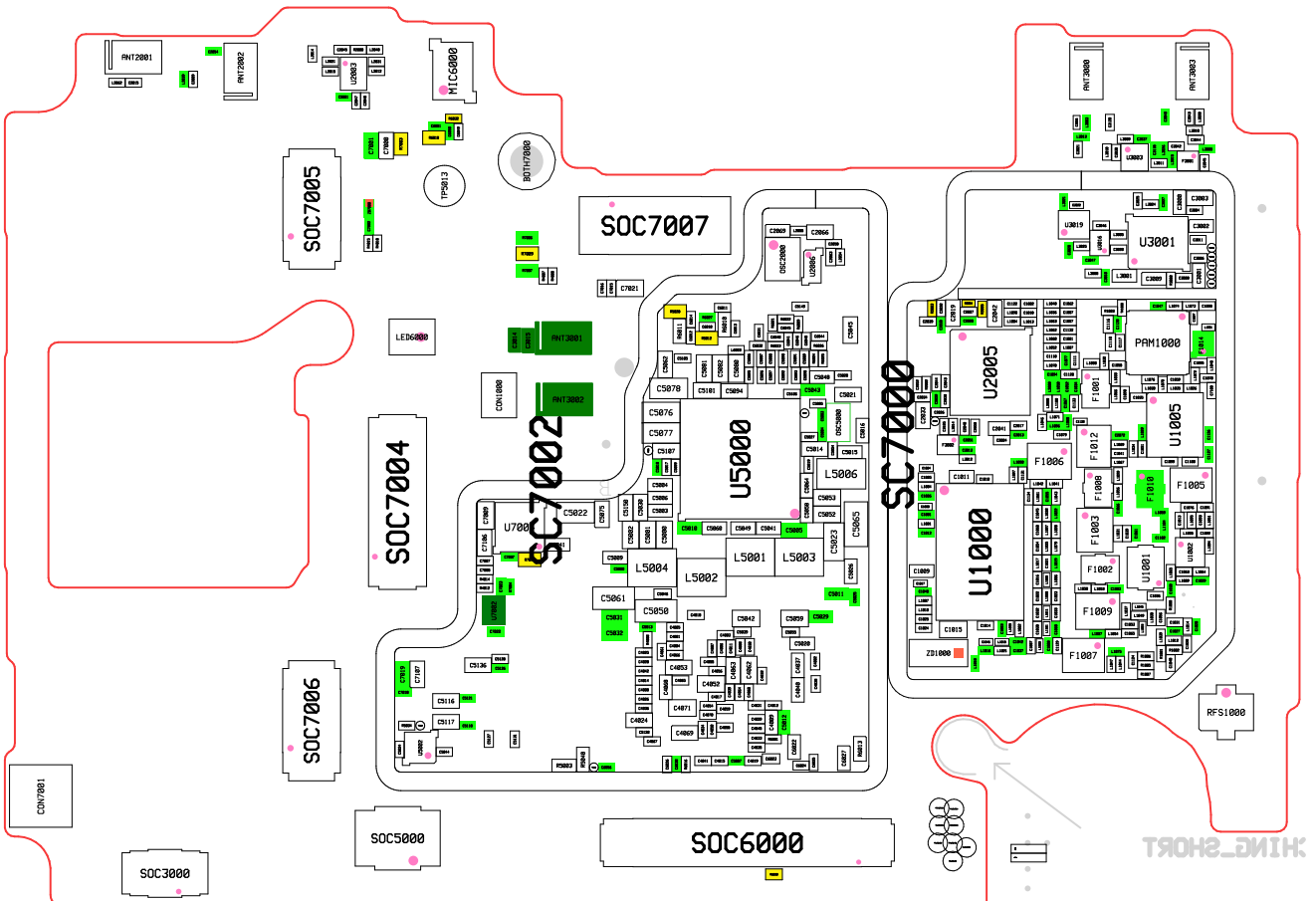
ANT2001
ANT2002
U2003
MIC6000
SOC7005
TP5013
BDTH7000
SOC7007
LED6000
ANT3001
ANT3002
CON1000
SOC7004
SC7002
U5000
U7000
SC7000
U2005
U3001
PAM1000
U1005
U1000
F1001
F1012
F1006
F1008
F1010
F1005
F1003
F1002
F1009
F1007
U1001
U1002
ZD1000
RFS1000
SOC7006
CON7001
SOC3000
SOC5000
SOC6000

SM-A047M_LA

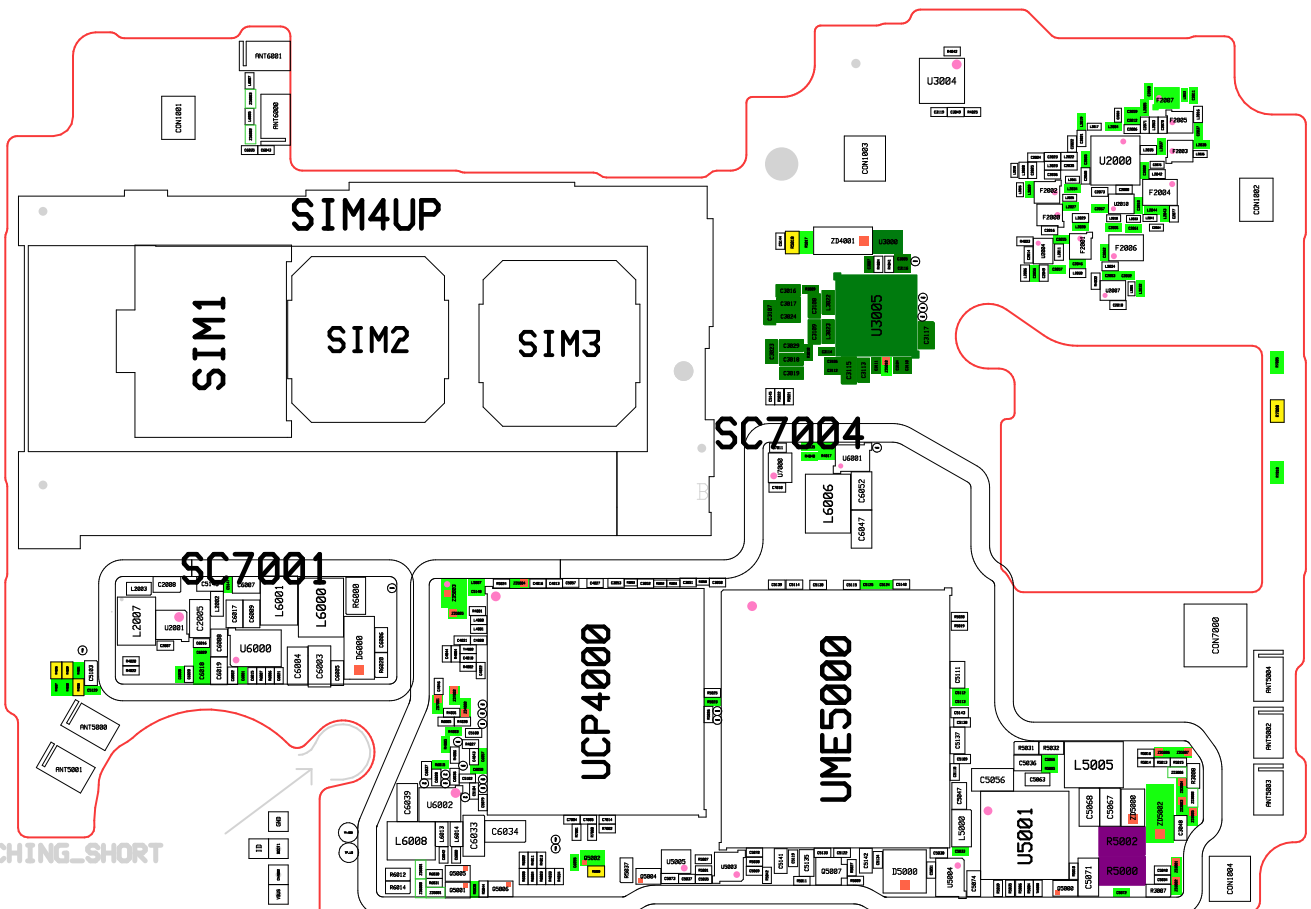
SIM4UP
SIM1
SIM2
SIM3
SC7004
SC7001
UCP4000
UME5000
U3005
U2000
U3004
U6000
U6002
U5001
L6000
L6001
L6006
L6008
L5005
CON1001
CON1002
CON1003
CON1004
CON7000
ANT6001
ANT5000
ANT5001
ANT5002
ANT5003
ANT5004
CHING_SHORT